» Pressure tank FD-1.2B

For maturing and fermentation we recommend this stainless steel pressure tank. It has been approved up to a pressure of 1.2 bar, proven and tested by the TÜV and its inner 3D surface is very easy to clean. It can be ideally used with both the Braumeister 200 litres and 500 litres.

This model can be either ordered with a vaulted or conical bottom (see pages 80 and 81). This also allows for different types of fermentation and maturing. The firmly fixed double jacket also allows cooling outside a cooling chamber.

APPLICATION RANGE

- Fermentation
- Maturation
- Storage

Ideal for
- Beer

STANDARD EQUIPMENT PRESSURE TANK FD-1.2B

- Tank shell made of stainless steel AISI 304 (V2A), Illd
- Vaulted, stable dished bottom made of stainless steel AISI 304 (V2A), surface Illd
- Outside jacket surface Illd
- Free-standing on welded-on pipe legs with screw hole
- Made in compliance with pressure equipment guideline 97/23/EG including TÜV certificate

SAMPLING
- Weld-on thread NW 10 DIN 11851 (for the installation of the sample tap)

FILLING DOME
- Filling dome NW 400 with flap lid

RACKING OUTLET
- With outlet in bottom end G 1" ET

BOTTOM OUTLET
- Vaulted tank bottom with outlet pipe, drawn forward, outlet G 1" ET

DOUBLE JACKET
- Laser welded double jacket for cooling with two connecting nozzles G 1" with external thread

PRESSURE REGULATION
- Nozzle NW 25 DIN 11851 at top end to attach the T-piece armature for CO_2-connection and a valve called "Spundapparat"

TEMPERATURE
- Weld-on thread NW 10 DIN 11851 for temperature measuring

TYPE PLATE
- Mounted on tank

SAFETY VALVE
- Set to working pressure 1.2 bar, mounted on tank top

DIMENSIONS OF PRESSURE TANK FD-1.2B

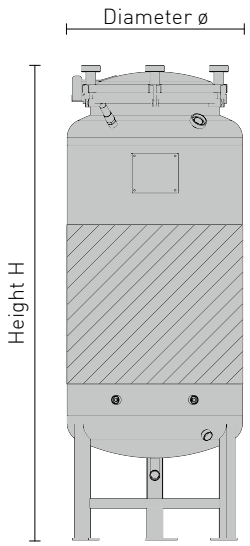

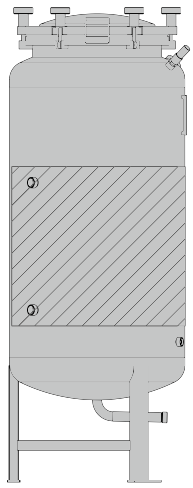

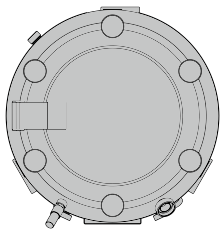

Capacity litres	ø mm	H mm	Order No.
120	550	1,030	FD-055-S-V0044
240	550	1,550	FD-055-S-V0045
625	820	1,735	FD-082-S-V0064

» Pressure tank FD-1.2B-ZKG

Speidel's Maturing Pressure Tank is the unrivaled solution for fermentation and maturing. This type of tank is often used for the one tank method. The yeast is gathered in the cone and, depending on the model you have, can be removed. The beer does not need to be decanted.

It is also the ideal supplement to the 200 litres or 500 litres Braumeister. The FD-1.2B-ZKG is approved for a pressure of up to 1.2 bar and quality documented by the TÜV, Germany's Technical Control Board. In case of even higher requirements the following two pages show you a maturing tank that is approved for up to 3 bar.

APPLICATION RANGE

- Fermentation
- Maturation
- Storage

Ideal for
- Beer

STANDARD EQUIPMENT PRESSURE TANK FD-1.2B-ZKG

- Tank shell made of stainless steel AISI 304 (V2A), Illd
- Vaulted, stable dished bottom as top end made of stainless steel AISI 304 (V2A), surface Illd
- Stable cone bottom end approx. 60°, made of stainless steel AISI 304 (V2A) surface Illd
- Outside jacket surface Illd
- Free-standing on welded-on pipe legs with mounting hole
- Made in compliance with pressure equipment guidelines 97/23/EG including TÜV certificate

SAMPLING
- Weld-on thread NW 10 DIN 11851 (for the installation of the sample tap)

FILLING DOME
- Filling dome NW 400 with flap lid

RACKING OUTLET
- With outlet in the bottom end G 1" ET

BOTTOM OUTLET
- Cone bottom 60° with outlet pipe – Outlet G 1" ET

DOUBLE JACKET
- Laser welded double jacket for cooling with 2 connecting nozzles G 1" with external thread

PRESSURE REGULATION
- Nozzle NW 25 DIN 11851 on top end to attach the T-piece armature for CO_2-connection and a valve called "Spundapparat"

TEMPERATURE
- Weld-on thread NW 10 DIN 11851 for temperature measuring

TYPE PLATE
- Safety valve mounted on tank
- Set to 1.2 bar working pressure, mounted on tank top

DIMENSIONS OF PRESSURE TANK FD-1.2B-ZKG

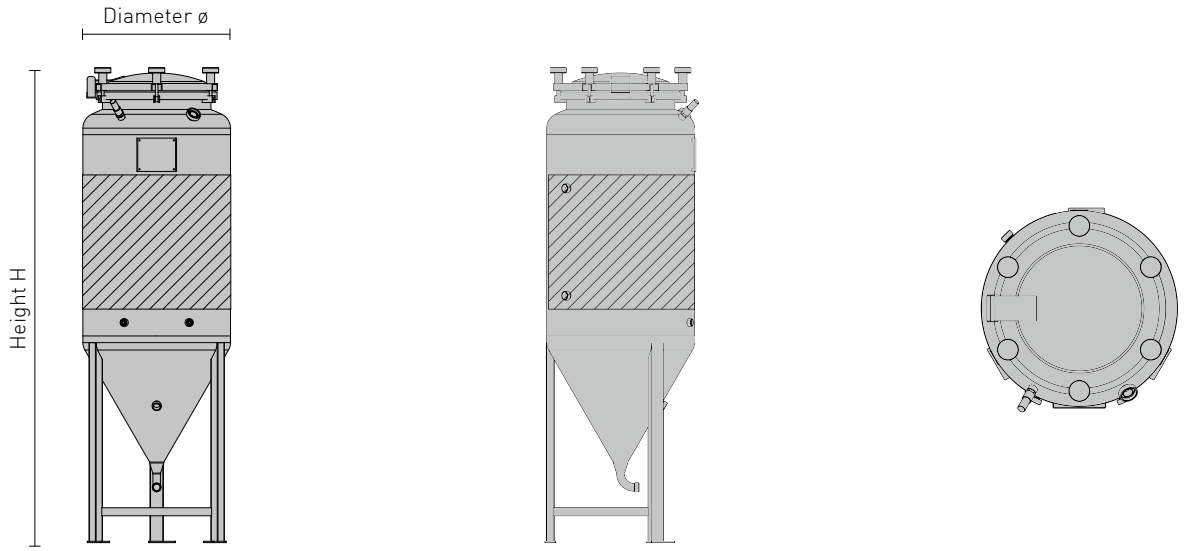

Capacity litres	ø mm	H mm	Order No.
120	550	1,030	FD-055-S-V0046
240	550	1,550	FD-055-S-V0043
625	820	1,735	FD-082-S-V0063

» Pressure tank FS-MO-3B-ZKG

This cylindrical-conical fermentation tank is ideal for the main fermentation and maturing. The yeast is gathered in the centre of the cone at the bottom of the tank. Depending on the model, the yeast can be removed at the bottom outlet.

Alternatively, a racking outlet at the cone can be used to extract the clarified beer. This model is mostly used with the one tank method.

APPLICATION RANGE

- Fermentation
- Maturation
- Storage

Ideal for
- Beer

STANDARD EQUIPMENT PRESSURE TANK FS-MO-3B-ZKG

- Tank shell made of stainless steel AISI 304 (V2A), Illc/Illd
- Cone bottom approx. 60° made of stainless steel AISI 304 (V2A), surface Illc/Illd
- Surface outside marbled or brushed
- Ladder safety bow (from 2,000 mm tank height onward)
- Free-standing on welded-on pipe legs

SAMPLING

- Weld-on thread NW 10 DIN 11851 (for the installation of the sample tap)

FILLING DOME AT 280 LITRES (2.8 HL)

- Filling dome NW 400 with flap lid

MAN HOLE FROM 1,000 LITRES (10.0 HL) UPWARDS

- Welded stable man hole neck with small swivelling doors

CLEANING PIPE FROM 850 LITRES (8.5 HL) UPWARDS

- Cleaning spray head, drill hole 360° with spray head holder, including cleaning pipe, connection thread NW 40

BOTTOM OUTLET

- Dimensionally stable cone bottom approx. 60°, with outlet pipe (drawn forward), outlet NW 40 DIN 11851

TYPE PLATE

- Safety valve mounted on tank edge
- Set to 3.0 bar working pressure, mounted on tank top

SET-UP EXAMPLE FOR PRESSURE TANK FS-MO-3B-ZKG

Item	Order No.
Pressure tank FS-MO-160-3B-5500 litres	
› h1 = 4,172 mm, Hges = 4,172 (h1) + 150 (cleaning pipe) + approx. 100 mm (height compensation) = 4,422 mm	
› Standard equipment as on page 83	FS-MO-160-5500-3B-ZKG
Cleaning pipe (page 133)	
› With disc valve NW 40	61375
Sampling (page 137)	
› With sampling tap NW 10 DIN 11851	83922
› With spiral	83866
Racking outlet (page 133)	
› Racking outlet and bottom outlet armature 50/40	88863
› With disc valve NW 40 DIN 11851	61375
Bottom outlet (page 133)	
› With disc valve NW 40 DIN 11851	61375
Bunging apparatus (page 144)	
› Bung pressure regulation ("Kellerfee")	
› Up to 3 bar for junction NW 25 DIN 11851 on cleaning pipe	81457
Heating and cooling jacket (page 104)	
› Double jacket A 2,9 m² with welded gland thread G 1" for connection to available warm water/cold water source	
› Version 1, connection position A1	1A1
› With cone double jacket 3.0 m²	1A1
Temperature measurement (page 140)	
› Bi-metal dial thermometer ø 100 mm, measuring range - 20 °C to + 60 °C	
› Screwed sleeve for thermometer length = 125 mm	TM-140F
Fill level (page 138)	
› Fill level indicator NW 10 DIN 11851 with litres scale	
› Closed version	FS-130I
› Connection between level indicator and cleaning pipe	VL50A
Adjustable feet (page 142)	
› With adjustable feet for tank legs (H = + approx. 100 mm)	46126
TÜV-fees (fees for German Technical Control Board) including technical approval and documentation	TÜV-001

DIMENSIONS OF PRESSURE TANK FD-3B-ZKG

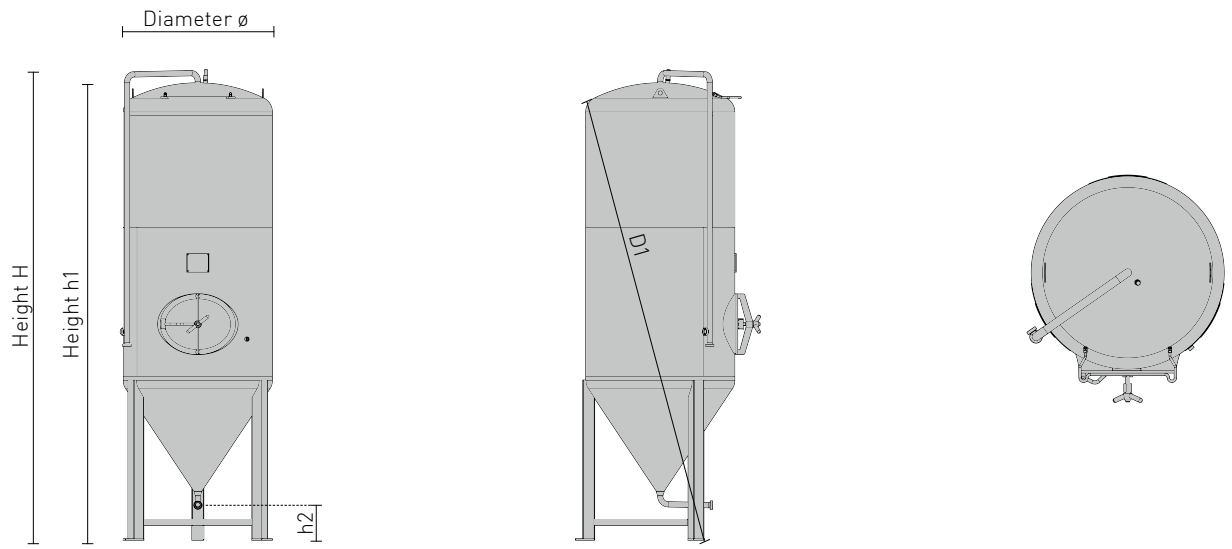

PRESSURE TANK FD-3B-ZKG Ø 630 MM

Capacity litres	Capacity hl	ø mm	h1 mm	H mm	h2 mm	D1 mm	Order No.
300	3.0	630	2,185	2,405	490	2,194	FD-063-0300-3B-ZKG

PRESSURE TANK FS-MO-3B-ZKG Ø 1,000 MM

Capacity litres	Capacity hl	ø mm	h1 mm	H mm	h2 mm	D1 mm	Order No.
800	8.0	1,000	2,335	2,485	490	2,173	FS-MO-100-0800-3B-ZKG
900	9.0	1,000	2,460	2,610	490	2,290	FS-MO-100-0950-3B-ZKG
1,100	11.0	1,000	2,710	2,860	490	2,530	FS-MO-100-1100-3B-ZKG
1,500	15.0	1,000	3,210	3,360	490	3,016	FS-MO-100-1500-3B-ZKG
1,700	17.0	1,000	3,460	3,610	490	3,216	FS-MO-100-1700-3B-ZKG
1,900	19.0	1,000	3,710	3,860	490	3,508	FS-MO-100-1900-3B-ZKG
2,100	21.0	1,000	3,960	4,110	490	3,755	FS-MO-100-2100-3B-ZKG
2,300	23.0	1,000	4,210	4,360	490	4,002	FS-MO-100-2300-3B-ZKG

PRESSURE TANK FS-MO-3B-ZKG Ø 1,200 MM

Capacity litres	Capacity hl	ø mm	h1 mm	H mm	h2 mm	D1 mm	Order No.
1,700	17.0	1,200	2,922	3,072	490	2,761	FS-MO-120-1700-3B-ZKG
2,000	20.0	1,200	3,172	3,322	490	3,001	FS-MO-120-2000-3B-ZKG
2,500	25.0	1,200	3,672	3,822	490	3,487	FS-MO-120-2500-3B-ZKG
3,100	31.0	1,200	4,172	4,322	490	3,978	FS-MO-120-3100-3B-ZKG
3,300	33.0	1,200	4,422	4,572	490	4,228	FS-MO-120-3300-3B-ZKG

PRESSURE TANK FS-MO-3B-ZKG Ø 1,400 MM

Capacity litres	Capacity hl	ø mm	h1 mm	H mm	h2 mm	D1 mm	Order No.
2,600	26.0	1,400	3,240	3,390	490	3,083	FS-MO-140-2600-3B-ZKG
2,950	29.5	1,400	3,490	3,640	490	3,324	FS-MO-140-2950-3B-ZKG
3,700	37.0	1,400	3,990	4,140	490	3,811	FS-MO-140-3700-3B-ZKG
4,100	41.0	1,400	4,240	4,390	490	4,056	FS-MO-140-4100-3B-ZKG
4,500	45.0	1,400	4,490	4,640	490	4,302	FS-MO-140-4500-3B-ZKG
4,800	48.0	1,400	4,740	4,890	490	4,549	FS-MO-140-4800-3B-ZKG
5,600	56.0	1,400	5,240	5,390	490	5,043	FS-MO-140-5600-3B-ZKG

PRESSURE TANK FS-MO-3B-ZKG Ø 1,600 MM

Capacity litres	Capacity hl	ø mm	h1 mm	H mm	h2 mm	D1 mm	Order No.
3,500	35.0	1,600	3,477	3,627	490	3,341	FS-MO-160-3500-3B-ZKG
4,000	40.0	1,600	3,727	3,877	490	3,580	FS-MO-160-4000-3B-ZKG
4,500	45.0	1,600	3,977	4,127	490	3,821	FS-MO-160-4500-3B-ZKG
5,000	50.0	1,600	4,227	4,377	490	4,064	FS-MO-160-5000-3B-ZKG
5,500	55.0	1,600	4,477	4,627	490	4,308	FS-MO-160-5500-3B-ZKG
6,000	60.0	1,600	4,727	4,877	490	4,553	FS-MO-160-6000-3B-ZKG
6,500	65.0	1,600	4,977	5,127	490	4,799	FS-MO-160-6500-3B-ZKG
7,000	70.0	1,600	5,227	5,377	490	5,045	FS-MO-160-7000-3B-ZKG
7,500	75.0	1,600	5,477	5,627	490	5,292	FS-MO-160-7500-3B-ZKG

PRESSURE TANK FS-MO-3B-ZKG Ø 1,800 MM

Capacity litres	Capacity hl	ø mm	h1 mm	H mm	h2 mm	D1 mm	Order No.
4,750	47.5	1,800	3,712	3,862	490	3,595	FS-MO-180-4750-3B-ZKG
5,400	54.0	1,800	3,962	4,112	490	3,832	FS-MO-180-5400-3B-ZKG
6,000	60.0	1,800	4,212	4,362	490	4,072	FS-MO-180-6000-3B-ZKG
6,600	66.0	1,800	4,462	4,612	490	4,314	FS-MO-180-6600-3B-ZKG
7,200	72.0	1,800	4,712	4,862	490	4,557	FS-MO-180-7200-3B-ZKG
7,800	78.0	1,800	4,962	5,112	490	4,801	FS-MO-180-7800-3B-ZKG
8,500	85.0	1,800	5,212	5,362	490	5,046	FS-MO-180-8500-3B-ZKG
9,100	91.0	1,800	5,462	5,612	490	5,291	FS-MO-180-9100-3B-ZKG
9,700	97.0	1,800	5,712	5,862	490	5,537	FS-MO-180-9700-3B-ZKG

PRESSURE TANK FS-MO-3B-ZKG Ø 2,000 MM

Capacity litres	Capacity hl	ø mm	h1 mm	H mm	h2 mm	D1 mm	Order No.
6,200	62.0	2,000	3,937	4,087	490	3,840	FS-MO-200 -6200-3B-ZKG
6,900	69.0	2,000	4,187	4,337	490	4,076	FS-MO-200 -6900-3B-ZKG
7,700	77.0	2,000	4,337	4,487	490	4,314	FS-MO-200 -7700-3B-ZKG
8,500	85.0	2,000	4,687	4,837	490	4,555	FS-MO-200 -8500-3B-ZKG
9,200	92.0	2,000	4,937	5,087	490	4,797	FS-MO-200 -9200-3B-ZKG
10,000	100.0	2,000	5,187	5,337	490	5,040	FS-MO-200-10000-3B-ZKG
10,800	108.0	2,000	5,437	5,587	490	5,284	FS-MO-200-10800-3B-ZKG
11,500	115.0	2,000	5,687	5,837	490	5,528	FS-MO-200-11500-3B-ZKG
12,300	123.0	2,000	5,937	6,087	490	5,774	FS-MO-200-12300-3B-ZKG

PRESSURE TANK FS-MO-3B-ZKG Ø 2,200 MM

Capacity litres	Capacity hl	ø mm	h1 mm	H mm	h2 mm	D1 mm	Order No.
7,800	78.0	2,200	4,170	4,320	490	4,093	FS-MO-220 -7800-3B-ZKG
8,800	88.0	2,200	4,420	4,570	490	4,328	FS-MO-220 -8800-3B-ZKG
9,700	97.0	2,200	4,670	4,820	490	4,565	FS-MO-220 -9700-3B-ZKG
10,500	105.0	2,200	4,920	5,070	490	4,804	FS-MO-220-10500-3B-ZKG
11,500	115.0	2,200	5,170	5,320	490	5,045	FS-MO-220-11500-3B-ZKG
12,500	125.0	2,200	5,420	5,570	490	5,287	FS-MO-220-12500-3B-ZKG
14,300	143.0	2,200	5,920	6,070	490	5,774	FS-MO-220-14300-3B-ZKG
15,200	152.0	2,200	6,170	6,320	490	6,019	FS-MO-220-15200-3B-ZKG
17,200	172.0	2,200	6,670	6,820	490	6,510	FS-MO-220-17200-3B-ZKG
18,000	180.0	2,200	6,920	7,070	490	6,756	FS-MO-220-18000-3B-ZKG
20,000	200.0	2,200	7,420	7,570	490	7,250	FS-MO-220-20000-3B-ZKG

» Pressure tank FS-M0-1B

The FS-M0-1B is suitable for low pressure fermentation and maturing up to 1 bar working pressure. It is the classic model for the two tank method.

APPLICATION RANGE

- Fermentation
- Maturation
- Storage

Ideal for

- Beer

STANDARD EQUIPMENT PRESSURE TANK FS-MO-1B

- Tank shell made of stainless steel AISI 304 (V2A), IIIc / IIId
- Tank bottom made of stainless steel AISI 304 (V2A), surface IIIc / IIId
- Tank top made of stainless steel AISI 304 (V2A), surface IIIc / IIId
- Surface outside marbled or brushed
- Ladder safety bow (from 2,000 mm tank height upwards)
- Free-standing on welded-on box-shaped legs

SAMPLING

- Weld-on thread NW 10 DIN 11851 (for the installation of the sample tap)

FILLING DOME AT 280 LITRES (2.8 HL)

- Filling dome NW 400 with flap lid man hole

FROM 800 LITRES (8.0 HL) UPWARDS

- Welded stable man hole neck with small swivelling doors

CLEANING PIPE FROM 800 LITRES (8.0 HL) UPWARDS

- Cleaning spray head, punch hole 360° with spray head holder, including cleaning hose, connection thread NW 40 DIN 11851

BOTTOM OUTLET

- Vaulted, dimensionally stable tank bottom, with outlet pipe (drawn forward), outlet NW 40 DIN 11851

TYPE PLATE

- Safety valve mounted on tank
- Set to 1.0 bar working pressure, mounted on tank top

SET-UP EXAMPLE FOR PRESSURE TANK FS-MO-1B

Item	Order No.
Pressure tank FS-MO-100-1B-1150 litres	
› h1 = 2,075 mm, Hges = 2,075 (h1) + 150 (cleaning pipe) + approx. 100 (height compensation) = 2,325 mm	
› Standard equipment as on page 89	FS-MO-100-1150-1B
Cleaning pipe (page 133)	
› With disc valve NW 40	61375
Sampling (page 137)	
› With sampling tap NW 10 DIN 11851	83922
› With spiral	83866
Racking outlet (page 133)	
› Welded gland with thread NW 40 DIN 11851	KA-121G
› With disc valve NW 40 DIN 11851	61375
Bottom outlet (page 133)	
› With disc valve NW 40 DIN 11851	61375
Bunging apparatus (page 144)	
› Bunging apparatus Piccolino	87712
Heating and cooling jacket (page 104)	
› Double jacket A 1,5 m² with welded gland thread G 1" for connection to available warm water / cold water source	
› Version 1, connection position A1	1A1
Temperature measurement (page 140)	
› Bi-metal dial thermometer ø 100 mm, measuring range - 20 °C to + 60 °C	
› Length = 125 mm	
› Including welded-on sleeve for thermometer	TM-140F
Fill level (page 138)	
› Fill level indicator NW 10 DIN 11851 with litres scale	
› Closed version	FS-130H
› Connection between fill level indicator and cleaning pipe	VL-50A
Adjustbale feet (page 142)	
› With adjustable feet for tank legs (H = + approx. 100 mm)	46127
TÜV-fees (fees for German Technical Control Board) including technical approval and documentation	TÜV-001

DIMENSIONS OF PRESSURE TANK FS-MO-1B

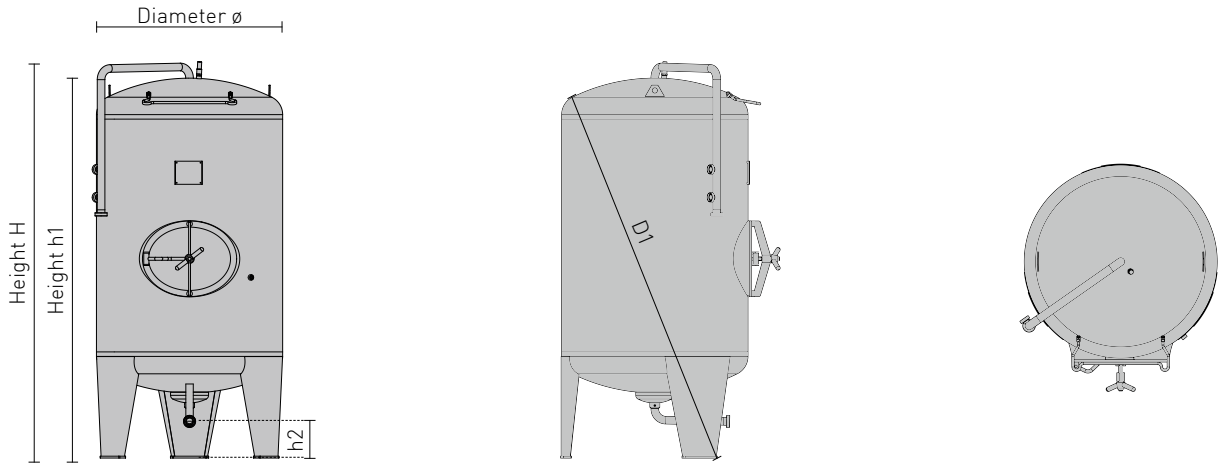

PRESSURE TANK FS-MO-1B Ø 630 MM

Capacity litres	Capacity hl	ø mm	h1 mm	H mm	h2 mm	D1 mm	Order No.
280	2.8	630	1,255	1,555	225	1,614	FD-063-0280-1B

PRESSURE TANK FS-MO-1B Ø 1,000 MM

Capacity litres	Capacity hl	ø mm	h1 mm	H mm	h2 mm	D1 mm	Order No.
750	7.5	1,000	1,443	1,575	225	1,706	FS-MO-100-0750 -1B
950	9.5	1,000	1,825	1,975	225	1,985	FS-MO-100-0950 -1B
1,150	11.5	1,000	2,075	2,225	225	2,210	FS-MO-100 -1150 -1B
1,350	13.5	1,000	2,325	2,475	225	2,440	FS-MO-100-1350 -1B
1,550	15.5	1,000	2,575	2,725	225	2,680	FS-MO-100 -1550 -1B
1,750	17.5	1,000	2,825	2,975	225	2,920	FS-MO-100 -1750 -1B
1,950	19.5	1,000	3,075	3,225	225	3,137	FS-MO-100 -1950 -1B
2,150	21.5	1,000	3,325	3,475	225	3,384	FS-MO-100 -2150 -1B

PRESSURE TANK FS-MO-1B Ø 1,200 MM

Capacity litres	Capacity hl	ø mm	h1 mm	H mm	h2 mm	D1 mm	Item No.
1,450	14.5	1,200	1,897	2,047	225	2,135	FS-MO -120-1450 -1B
1,750	17.5	1,200	2,147	2,297	225	2,340	FS-MO -120-1750 -1B
2,000	20.0	1,200	2,397	2,547	225	2,560	FS-MO -120-2000 -1B
2,300	23.0	1,200	2,647	2,797	225	2,795	FS-MO -120-2300 -1B
2,600	26.0	1,200	2,897	3,047	225	3,030	FS-MO -120-2600 -1B
2,850	28.5	1,200	3,147	3,297	225	3,221	FS-MO -120-2850 -1B
3,100	31.0	1,200	3,397	3,547	225	3,466	FS-MO -120-3100 -1B

PRESSURE TANK FS-MO-1B Ø 1,400 MM

Capacity litres	Capacity hl	ø mm	h1 mm	H mm	h2 mm	D1 mm	Order No.
2,100	21.0	1,400	2,017	2,167	225	2,153	FS-MO-140-2100-1B
2,450	24.5	1,400	2,267	2,417	225	2,364	FS-MO-140-2450-1B
2,850	28.5	1,400	2,517	2,667	225	2,589	FS-MO-140-2850-1B
3,200	32.0	1,400	2,767	2,917	225	2,819	FS-MO-140-3200-1B
3,600	36.0	1,400	3,017	3,167	225	3,055	FS-MO-140-3600-1B
4,000	40.0	1,400	3,267	3,417	225	3,295	FS-MO-140-4000-1B
4,400	44.0	1,400	3,517	3,667	225	3,537	FS-MO-140-4400-1B
4,750	47.5	1,400	3,767	3,917	225	3,780	FS-MO-140-4750-1B
5,100	51.0	1,400	4,017	4,167	225	4,025	FS-MO-140-5100-1B

PRESSURE TANK FS-MO-1B Ø 1,600 MM

Capacity litres	Capacity hl	ø mm	h1 mm	H mm	h2 mm	D1 mm	Order No.
2,650	26.5	1,600	2,007	2,157	225	2,265	FS-MO-160-2650-1B
3,150	31.5	1,600	2,257	2,407	225	2,470	FS-MO-160-3150-1B
3,650	36.5	1,600	2,507	2,657	225	2,683	FS-MO-160-3650-1B
4,100	41.0	1,600	2,757	2,907	225	2,819	FS-MO-160-4100-1B
4,600	46.0	1,600	3,007	3,157	225	3,055	FS-MO-160-4600-1B
5,100	51.0	1,600	3,257	3,407	225	3,295	FS-MO-160-5100-1B
5,600	56.0	1,600	3,507	3,657	225	3,537	FS-MO-160-5600-1B
6,100	61.0	1,600	3,757	3,907	225	3,780	FS-MO-160-6100-1B
6,600	66.0	1,600	4,007	4,157	225	4,025	FS-MO-160-6600-1B

PRESSURE TANK FS-MO-1B Ø 1,800 MM

Capacity litres	Capacity hl	ø mm	h1 mm	H mm	h2 mm	D1 mm	Order No.
3,600	36.0	1,800	2,137	2,287	225	2,468	FS-MO-180-3600-1B
4,250	42.5	1,800	2,387	2,537	225	2,667	FS-MO-180-4250-1B
4,900	49.0	1,800	2,637	2,787	225	2,874	FS-MO-180-4900-1B
5,500	55.0	1,800	2,887	3,037	225	3,088	FS-MO-180-5500-1B
6,100	61.0	1,800	3,137	3,287	225	3,313	FS-MO-180-6100-1B
6,700	67.0	1,800	3,387	3,537	225	3,542	FS-MO-180-6700-1B
7,400	74.0	1,800	3,637	3,787	225	3,776	FS-MO-180-7400-1B
8,000	80.0	1,800	3,887	4,037	225	4,014	FS-MO-180-8000-1B
8,600	86.0	1,800	4,137	4,287	225	4,254	FS-MO-180-8600-1B

PRESSURE TANK FS-MO-1B Ø 2,000 MM

Capacity litres	Capacity hl	ø mm	h1 mm	H mm	h2 mm	D1 mm	Order No.
4,500	45.0	2,000	2,137	2,287	225	2,514	FS-MO-200 -4500-1B
5,200	52.0	2,000	2,387	2,537	225	2,707	FS-MO-200 -5200-1B
6,000	60.0	2,000	2,637	2,787	225	2,909	FS-MO-200 -6000-1B
6,800	68.0	2,000	2,887	3,037	225	3,118	FS-MO-200 -6800-1B
7,600	76.0	2,000	3,137	3,287	225	3,338	FS-MO-200 -7600-1B
8,300	83.0	2,000	3,387	3,537	225	3,560	FS-MO-200 -8300-1B
9,100	91.0	2,000	3,637	3,787	225	3,790	FS-MO-200 -9100-1B
9,900	99.0	2,000	3,887	4,037	225	4,025	FS-MO-200 -9900-1B
10,600	106.0	2,000	4,137	4,287	225	4,263	FS-MO-200-10600-1B

PRESSURE TANK FS-MO-1B Ø 2,200 MM

Capacity litres	Capacity hl	ø mm	h1 mm	H mm	h2 mm	D1 mm	HV	Order No.
6,500	65.0	2,200	2,580	2,720	225	2,953	8xM24	FS-MO-220 -6500-1B
7,400	74.0	2,200	2,830	2,970	225	3,141	8xM24	FS-MO-220 -7400-1B
8,400	84.0	2,200	3,080	3,220	225	3,338	8xM24	FS-MO-220 -8400-1B
9,200	92.0	2,200	3,330	3,470	225	3,541	8xM24	FS-MO-220 -9200-1B
10,200	102.0	2,200	3,580	3,720	225	3,750	8xM24	FS-MO-220-10200-1B
12,000	120.0	2,200	4,080	4,220	225	4,187	8xM24	FS-MO-220-12000-1B
14,000	140.0	2,200	4,580	4,720	225	4,642	8xM24	FS-MO-220-14000-1B
15,800	158.0	2,200	5,080	5,200	225	5,113	8xM24	FS-MO-220-15800-1B
16,800	168.0	2,200	5,330	5,470	225	5,351	8xM24	FS-MO-220-16800-1B
19,000	190.0	2,200	2,200	5,980	225	5,969	8xM24	FS-MO-220-19000-1B
20,000	200.0	2,200	2,200	6,230	225	6,212	8xM24	FS-MO-220-20000-1B

PRESSURE TANK FS-MO-1B Ø 2,400 MM

Capacity litres	Capacity hl	ø mm	h1 mm	H mm	h2 mm	D1 mm	HV	Order No.
7,800	78.0	2,400	2,660	2,800	225	3,118	8xM24	FS-MO-240 -7800-1B
8,900	89.0	2,400	2,910	3,050	225	3,301	8xM24	FS-MO-240 -8900-1B
10,000	100.0	2,400	3,160	3,300	225	3,492	8xM24	FS-MO-240-10000-1B
12,200	122.0	2,400	3,660	3,800	225	3,895	8xM24	FS-MO-240-12200-1B
14,500	145.0	2,400	4,160	4,300	225	4,318	8xM24	FS-MO-240-14500-1B
16,200	162.0	2,400	4,410	4,560	225	4,666	8xM24	FS-MO-240-16200-1B
17,300	173.0	2,400	4,660	4,810	225	4,893	8xM24	FS-MO-240-17300-1B
19,500	195.0	2,400	5,160	5,310	225	5,359	8xM24	FS-MO-240-19500-1B
20,500	205.0	2,400	5,410	5,560	225	5,595	8xM24	FS-MO-240-20500-1B
23,000	230.0	2,400	5,910	6,060	225	6,074	8xM24	FS-MO-240-23000-1B
24,000	240.0	2,400	6,160	6,310	225	6,315	8xM24	FS-MO-240-24000-1B
25,000	250.0	2,400	6,410	6,560	225	6,558	8xM24	FS-MO-240-25000-1B

PRESSURE TANK FS-MO-1B Ø 2,600 MM

Capacity litres	Capacity hl	ø mm	h1 mm	H mm	h2 mm	D1 mm	HV	Order No.
10,200	102.0	2,600	2,730	2,880	225	3,380	8 x M24	FS -MO -260 -10200-1B
11,500	115.0	2,600	2,980	3,130	225	3,562	8 x M24	FS -MO -260 -11500-1B
12,600	126.0	2,600	3,230	3,380	225	3,752	8 x M24	FS -MO -260 -12600-1B
14,000	140.0	2,600	3,480	3,630	225	3,949	8 x M24	FS -MO -260 -14000-1B
16,600	166.0	2,600	3,980	4,130	225	4,359	8 x M24	FS -MO -260 -16600-1B
18,000	180.0	2,600	4,230	4,380	225	4,571	8 x M24	FS -MO -260 -18000-1B
20,500	205.0	2,600	4,730	4,880	225	5,012	8 x M24	FS -MO -260 -20500-1B
22,000	220.0	2,600	4,980	5,130	225	5,238	8 x M24	FS -MO -260 -22000-1B
24,500	245.0	2,600	5,480	5,630	225	5,701	8 x M24	FS -MO -260 -24500-1B
26,000	260.0	2,600	5,730	5,880	225	5,936	8 x M24	FS -MO -260 -26000-1B
27,000	270.0	2,600	5,980	6,130	225	6,207	10 x M24	FS -MO -260 -27000-1B
28,500	285.0	2,600	6,230	6,380	225	6,444	10 x M24	FS -MO -260 -28500-1B
30,000	300.0	2,600	6,480	6,630	225	6,683	10 x M24	FS -MO -260 -30000-1B
32,500	325.0	2,600	6,980	7,130	225	7,164	10 x M24	FS -MO -260 -32500-1B

PRESSURE TANK FS-MO-1B Ø 2,800 MM

Capacity litres	Capacity hl	ø mm	h1 mm	H mm	h2 mm	D1 mm	HV	Order No.
12,100	121.0	2,800	2,835	2,985	225	3,567	8 x M24	FS -MO -280 -12100 -1B
13,600	136.0	2,800	3,085	3,235	225	3,745	8 x M24	FS -MO -280 -13600 -1B
15,000	150.0	2,800	3,335	3,485	225	3,931	8 x M24	FS -MO -280 -15000 -1B
16,500	165.0	2,800	3,585	3,735	225	4,124	8 x M24	FS -MO -280 -16500 -1B
18,200	182.0	2,800	3,835	3,985	225	4,323	8 x M24	FS -MO -280 -18200 -1B
21,200	212.0	2,800	4,335	4,485	225	4,735	8 x M24	FS -MO -280 -21200 -1B
24,200	242.0	2,800	4,835	4,985	225	5,168	8 x M24	FS -MO -280 -24200 -1B
25,800	258.0	2,800	5,085	5,235	225	5,389	8 x M24	FS -MO -280 -25800 -1B
27,400	274.0	2,800	5,335	5,485	225	5,614	10 x M24	FS -MO -280 -27400 -1B
29,000	290.0	2,800	5,585	5,735	225	5,844	10 x M24	FS -MO -280 -29000 -1B
32,000	320.0	2,800	6,085	6,235	225	6,311	10 x M24	FS -MO -280 -32000 -1B
33,500	335.0	2,800	6,335	6,485	225	6,548	10 x M24	FS -MO -280 -33500 -1B
35,000	350.0	2,800	6,585	6,735	225	6,786	10 x M24	FS -MO -280 -35000 -1B
36,500	365.0	2,800	6,835	6,985	225	7,026	10 x M24	FS -MO -280 -36500 -1B
38,000	380.0	2,800	7,085	7,235	225	7,267	10 x M24	FS -MO -280 -38000 -1B
41,000	410.0	2,800	7,585	7,735	225	7,779	10 x M30	FS -MO -280 -41000 -1B

PRESSURE TANK FS-MO-1B Ø 3,000 MM

Capacity litres	Capacity hl	ø mm	h1 mm	H mm	h2 mm	D1 mm	HV	Order No.
14,300	143.0	3,000	2,850	3,000	225	3,695	8 x M30	FS -MO -300 -14300 -1B
16,000	160.0	3,000	3,100	3,250	225	3,867	8 x M30	FS -MO -300 -16000 -1B
18,000	180.0	3,000	3,350	3,500	225	4,046	8 x M30	FS -MO -300 -18000 -1B
19,500	195.0	3,000	3,600	3,750	225	4,233	8 x M30	FS -MO -300 -19500 -1B
21,500	215.0	3,000	3,850	4,000	225	4,427	8 x M30	FS -MO -300 -21500 -1B
23,000	230.0	3,000	4,100	4,250	225	4,625	8 x M30	FS -MO -300 -23000 -1B
25,000	250.0	3,000	4,350	4,500	225	4,829	8 x M30	FS -MO -300 -25000 -1B
28,500	285.0	3,000	4,850	5,000	225	5,248	8 x M30	FS -MO -300 -28500 -1B
30,000	300.0	3,000	5,100	5,250	225	5,463	8 x M30	FS -MO -300 -30000 -1B
32,000	320.0	3,000	5,350	5,500	225	5,686	8 x M30	FS -MO -300 -32000 -1B
35,500	355.0	3,000	5,850	6,000	225	6,187	10 x M30	FS -MO -300 -35500 -1B
37,200	372.0	3,000	6,100	6,250	225	6,414	10 x M30	FS -MO -300 -37200 -1B
39,000	390.0	3,000	6,350	6,500	225	6,645	10 x M30	FS -MO -300 -39000 -1B
42,500	425.0	3,000	6,850	7,000	225	7,112	10 x M30	FS -MO -300 -42500 -1B
44,200	442.0	3,000	7,100	7,250	225	7,349	10 x M30	FS -MO -300 -44200 -1B
47,800	478.0	3,000	7,600	7,750	225	7,826	10 x M30	FS -MO -300 -47800 -1B
49,500	495.0	3,000	7,850	8,000	225	8,066	10 x M30	FS -MO -300 -49500 -1B

» Pressure tank FS-MO-3B

The FS-MO-3B is suitable for high pressure fermentation and maturing up to a working pressure of 3 bar. This version is the classic model for fermentation or maturing in the two tank method.

APPLICATION RANGE

› Fermentation
› Maturation
› Storage

Ideal for
› Beer

STANDARD EQUIPMENT PRESSURE TANK FS-MO-3B

- Tank shell made of stainless steel AISI 304 (V2A), Illc/Illd
- Tank bottom made of stainless steel AISI 304 (V2A), surface Illc/Illd
- Tank top made of stainless steel AISI 304 (V2A), surface Illc/Illd
- Surface outside marbled or brushed
- Ladder safety bow (from 2,000 mm tank height upwards)
- Free-standing on welded-on box-shaped legs

SAMPLING

- Weld-on thread NW 10 DIN 11851 (for the installation of the sample tap)

FILLING DOME AT 280 LITRES (2.8 HL)

- Filling dome NW 400 with flap lid man hole

FROM 800 LITRES (8.0 HL) UPWARDS

- Welded stable man hole neck with small swivelling doors

CLEANING PIPE FROM 800 LITRES (8.0 HL) UPWARDS

- Cleaning spray head, drill hole 360° with spray head holder, including cleaning pipe, connection thread NW 40 DIN 11851

BOTTOM OUTLET

- Vaulted dimensionally stable tank bottom with outlet pipe (drawn forward), outlet NW 40 DIN 11851

TYPE PLATE

- Mounted on tank

SAFETY VALVE

- Set to 3.0 bar working pressure, mounted on tank top

SET-UP EXAMPLE FOR PRESSURE TANK FS-MO-3B

Item	Order No.
Pressure tank FS-MO-220-3B-15000 litres	
› h1 = 4,840 mm, Hges = 4,840 (h1) + 150 (cleaning pipe) + approx. 100 (height compensation) = 5,090 mm	
› Standard equipment as on page 97	FS-MO-220-15000-3B
Cleaning pipe (page 133)	
› With disc valve NW 40	61375
› With CO_2-connection	GS-091A
› With CO_2-shut-off tap	87986
Sampling (page 137)	
› With sampling tap NW 10 DIN 11851	83922
› With spiral	83866
Racking outlet (page 133)	
› Welded gland with thread NW 50 DIN 11851	KA-121H
› With disc valve NW 50 DIN 11851	64945
Bottom outlet (page 133)	
› With disc valve NW 50 DIN 11851	64945
Bunging apparatus (page 144)	
› Bunging apparatus Vario-Plus	81493
Heating and cooling jacket (page 104)	
› Double jacket A 9,1 m² with welded gland thread G 1" for connection to available warm water / cold water source	
› Version 1, connection position A1	1A1
Temperature measurement (page 140)	
› Bi-metal dial thermometer ø 100 mm, measuring range - 20 °C to + 60 °C	
› Length = 125 mm	
› Including welded-on sleeve for thermometer	TM-140F
Fill level (page 138)	
› Fill level indicator NW 10 DIN 11851 with litres scale	
› Closed version	FS-130K
› Connection between fill level indicator and cleaning pipe	VL50A
Adjustbale feet (page 142)	
› With adjustable feet for tank legs (H = + approx. 100 mm)	46129
Insulation (page 148)	ISO-100A
TÜV-fees (fees for German Technical Control Board) including technical approval and documentation	TÜV-001

DIMENSIONS OF PRESSURE TANK FS-MO-3B

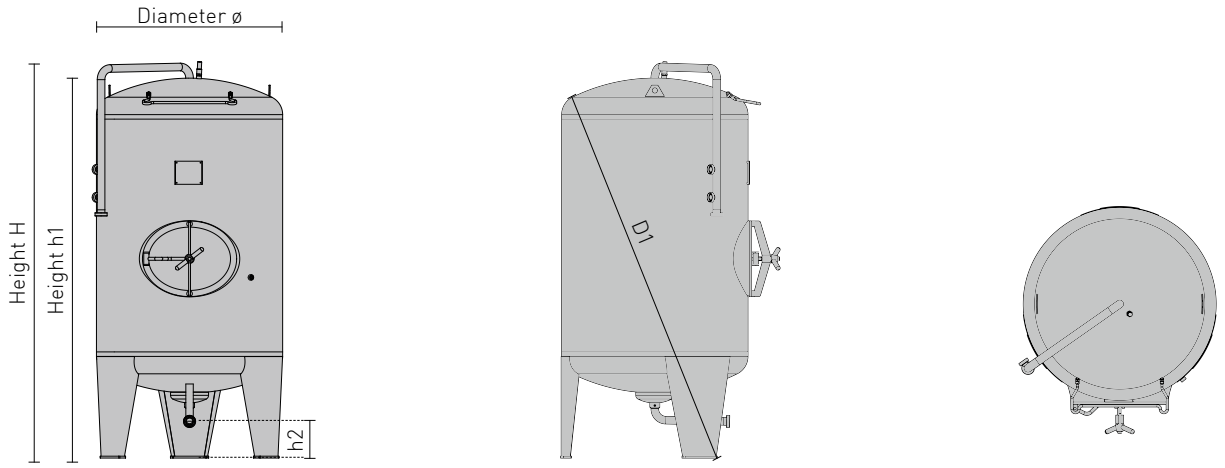

PRESSURE TANK FD FS-MO-3B Ø 630 MM

Capacity litres	Capacity hl	ø mm	h1 mm	H mm	h2 mm	D1 mm	Order No.
280	2.8	630	1,255	1,555	225	1,614	FD-063-0280-3B

PRESSURE TANK FS-MO-3B Ø 1,000 MM

Capacity litres	Capacity hl	ø mm	h1 mm	H mm	h2 mm	D1 mm	Order No.
750	7.5	1,000	1,443	1,575	225	1,706	FS- MO-100- 0750-3B
950	9.5	1,000	1,825	1,975	225	1,985	FS- MO-100- 0950-3B
1,150	11.5	1,000	2,075	2,225	225	2,210	FS- MO-100- 1150-3B
1,350	13.5	1,000	2,325	2,475	225	2,440	FS- MO-100- 1350-3B
1,550	15.5	1,000	2,575	2,725	225	2,680	FS- MO-100- 1550-3B
1,750	17.5	1,000	2,825	2,975	225	2,920	FS- MO-100- 1750-3B
1,950	19.5	1,000	3,075	3,225	225	3,137	FS- MO-100- 1950-3B
2,150	21.5	1,000	3,325	3,475	225	3,384	FS- MO-100- 2150-3B

PRESSURE TANK FS-MO-3B Ø 1,200 MM

Capacity litres	Capacity hl	ø mm	h1 mm	H mm	h2 mm	D1 mm	Order No.
1,450	14.5	1,200	1,897	2,047	225	2,135	FS- MO-120-1450- 3B
1,750	17.5	1,200	2,147	2,297	225	2,340	FS- MO-120-1750- 3B
2,000	20.0	1,200	2,397	2,547	225	2,560	FS- MO-120-2000- 3B
2,300	23.0	1,200	2,647	2,797	225	2,795	FS- MO-120-2300- 3B
2,600	26.0	1,200	2,897	3,047	225	3,030	FS- MO-120-2600- 3B
2,850	28.5	1,200	3,147	3,297	225	3,221	FS- MO-120-2850- 3B
3,100	31.0	1,200	3,397	3,547	225	3,466	FS- MO-120-3100- 3B

PRESSURE TANK FS-MO-3B Ø 1,400 MM

Capacity litres	Capacity hl	ø mm	h1 mm	H mm	h2 mm	D1 mm	Order No.
2,100	21.0	1,400	2,017	2,167	225	2,153	FS-MO-140-2100-3B
2,450	24.5	1,400	2,267	2,417	225	2,364	FS-MO-140-2450-3B
2,850	28.5	1,400	2,517	2,667	225	2,589	FS-MO-140-2850-3B
3,200	32.0	1,400	2,767	2,917	225	2,819	FS-MO-140-3200-3B
3,600	36.0	1,400	3,017	3,167	225	3,055	FS-MO-140-3600-3B
4,000	40.0	1,400	3,267	3,417	225	3,295	FS-MO-140-4000-3B
4,400	44.0	1,400	3,517	3,667	225	3,537	FS-MO-140-4400-3B
4,750	47.5	1,400	3,767	3,917	225	3,780	FS-MO-140-4750-3B
5,100	51.0	1,400	4,017	4,167	225	4,025	FS-MO-140-5100-3B

PRESSURE TANK FS-MO-3B Ø 1,600 MM

Capacity litres	Capacity hl	ø mm	h1 mm	H mm	h2 mm	D1 mm	Order No.
3,100	31.0	1,600	2,257	2,407	225	2,470	FS-MO-160-3100-3B
3,600	36.0	1,600	2,507	2,657	225	2,683	FS-MO-160-3600-3B
4,100	41.0	1,600	2,757	2,907	225	2,819	FS-MO-160-4100-3B
4,500	45.0	1,600	3,007	3,157	225	3,055	FS-MO-160-4500-3B
5,000	50.0	1,600	3,257	3,407	225	3,295	FS-MO-160-5000-3B
5,500	55.0	1,600	3,507	3,657	225	3,537	FS-MO-160-5500-3B
6,000	60.0	1,600	3,757	3,907	225	3,780	FS-MO-160-6000-3B
6,500	65.0	1,600	4,007	4,157	225	4,025	FS-MO-160-6500-3B

PRESSURE TANK FS-MO-3B Ø 1,800 MM

Capacity litres	Capacity hl	ø mm	h1 mm	H mm	h2 mm	D1 mm	Item No.
4,000	40.0	1,800	2,387	2,537	225	2,667	FS-MO-180-4000-3B
4,700	47.0	1,800	2,637	2,787	225	2,874	FS-MO-180-4700-3B
5,300	53.0	1,800	2,887	3,037	225	3,088	FS-MO-180-5300-3B
5,900	59.0	1,800	3,137	3,287	225	3,313	FS-MO-180-5900-3B
6,500	65.0	1,800	3,387	3,537	225	3,542	FS-MO-180-6500-3B
7,100	71.0	1,800	3,637	3,787	225	3,776	FS-MO-180-7100-3B
7,800	78.0	1,800	3,887	4,037	225	4,014	FS-MO-180-7800-3B
8,400	84.0	1,800	4,137	4,287	225	4,254	FS-MO-180-8400-3B

PRESSURE TANK FS-MO-3B Ø 2,000 MM

Capacity litres	Capacity hl	ø mm	h1 mm	H mm	h2 mm	D1 mm	Item No.
5,200	52.0	2,000	2,487	2,637	225	2,707	FS-MO-200-5200-3B
6,000	60.0	2,000	2,737	2,887	225	2,909	FS-MO-200-6000-3B
6,800	68.0	2,000	2,987	3,137	225	3,118	FS-MO-200-6800-3B
7,500	75.0	2,000	3,237	3,387	225	3,338	FS-MO-200-7500-3B
8,300	83.0	2,000	3,487	3,637	225	3,560	FS-MO-200-8300-3B
9,100	91.0	2,000	3,737	3,887	225	3,790	FS-MO-200-9100-3B
9,900	99.0	2,000	3,887	4,137	225	4,025	FS-MO-200-9900-3B
10,600	106.0	2,000	4,237	4,387	225	4,263	FS-MO-200-10600-3B

PRESSURE TANK FS-MO-3B Ø 2,200 MM

Capacity litres	Capacity hl	ø mm	h1 mm	H mm	h2 mm	D1 mm	HV	Order No.
6,500	65.0	2,200	2,590	2,740	225	2,953	8 x M24	FS-MO-220 -6500-3B
7,500	75.0	2,200	2,840	2,990	225	3,141	8 x M24	FS-MO-220 -7500-3B
8,400	84.0	2,200	3,090	3,240	225	3,338	8 x M24	FS-MO-220 -8400-3B
9,300	93.0	2,200	3,340	3,490	225	3,541	8 x M24	FS-MO-220 -9300-3B
10,200	102.0	2,200	3,590	3,740	225	3,750	8 x M24	FS-MO-220-10200-3B
12,100	121.0	2,200	4,090	4,240	225	4,187	8 x M24	FS-MO-220-12100-3B
14,000	140.0	2,200	4,590	4,740	225	4,642	8 x M24	FS-MO-220-14000-3B
15,000	150.0	2,200	4,840	5,240	225	5,113	8 x M24	FS-MO-220-15000-3B
16,000	160.0	2,200	5,090	5,490	225	5,351	8 x M24	FS-MO-220-16000-3B
18,800	188.0	2,200	5,840	6,130	225	5,969	8 x M24	FS-MO-220-18800-3B
19,600	196.0	2,200	6,090	6,380	225	6,212	8 x M24	FS-MO-220-19600-3B

PRESSURE TANK FS-MO-3B Ø 2,400 MM

Capacity litres	Capacity hl	ø mm	h1 mm	H mm	h2 mm	D1 mm	HV	Order No.
8,000	80.0	2,400	2,610	2,760	225	3,118	8 x M24	FS-MO-240 -8000-3B
9,200	92.0	2,400	2,860	3,010	225	3,301	8 x M24	FS-MO-240 -9200-3B
10,300	103.0	2,400	3,110	3,260	225	3,492	8 x M24	FS-MO-240-10300-3B
12,500	125.0	2,400	3,610	3,760	225	3,895	8 x M24	FS-MO-240-12500-3B
14,500	145.0	2,400	4,110	4,260	225	4,318	8 x M24	FS-MO-240-14500-3B
15,800	158.0	2,400	4,360	4,680	225	4,666	8 x M24	FS-MO-240-15800-3B
17,000	170.0	2,400	4,660	4,810	225	4,893	8 x M24	FS-MO-240-17000-3B
19,200	192.0	2,400	5,160	5,310	225	5,359	8 x M24	FS-MO-240-19200-3B
20,400	204.0	2,400	5,410	5,560	225	5,595	8 x M24	FS-MO-240-20400-3B
22,500	225.0	2,400	5,910	6,060	225	6,074	8 x M24	FS-MO-240-22500-3B
23,500	235.0	2,400	6,160	6,310	225	6,315	8 x M24	FS-MO-240-23500-3B
24,800	248.0	2,400	6,410	6,560	225	6,558	8 x M24	FS-MO-240-24800-3B

PRESSURE TANK FS-MO-3B Ø 2,600 MM

Capacity litres	Capacity hl	ø mm	h1 mm	H mm	h2 mm	D1 mm	HV	Order No.
9,900	99.0	2,600	2,800	2,880	225	3,380	8 x M24	FS-MO-260 -9900 -3B
11,200	112.0	2,600	3,050	3,130	225	3,562	8 x M24	FS-MO-260 -11200 -3B
12,500	125.0	2,600	3,330	3,380	225	3,752	8 x M24	FS-MO-260 -12500 -3B
13,600	136.0	2,600	3,550	3,630	225	3,949	8 x M24	FS-MO-260 -13600 -3B
16,500	165.0	2,600	4,050	4,130	225	4,359	8 x M24	FS-MO-260 -16500 -3B
17,500	175.0	2,600	4,300	4,380	225	4,571	8 x M24	FS-MO-260 -17500 -3B
20,300	203.0	2,600	4,800	4,880	225	5,012	8 x M24	FS-MO-260-20300 -3B
21,500	215.0	2,600	5,050	5,130	225	5,238	8 x M24	FS-MO-260 -21500 -3B
24,200	242.0	2,600	5,550	5,630	225	5,701	8 x M24	FS-MO-260-24200 -3B
25,500	255.0	2,600	5,800	5,880	225	5,936	8 x M24	FS-MO-260-25500 -3B
27,000	270.0	2,600	6,050	6,130	225	6,207	8 x M24	FS-MO-260-27000 -3B
28,000	280.0	2,600	6,300	6,380	225	6,444	10 x M24	FS-MO-260-28000 -3B
29,500	295.0	2,600	6,550	6,630	225	6,683	10 x M24	FS-MO-260-29500 -3B
32,000	320.0	2,600	7,050	7,130	225	7,164	10 x M24	FS-MO-260-32000 -3B

PRESSURE TANK FS-MO-3B Ø 2,800 MM

Capacity litres	Capacity hl	ø mm	h1 mm	H mm	h2 mm	D1 mm	HV	Order No.
11,800	118.0	2,800	2,945	3,095	225	3,567	8 x M24	FS-MO-280-11800-3B
13,400	134.0	2,800	3,195	3,305	225	3,745	8 x M24	FS-MO-280-13400-3B
15,000	150.0	2,800	3,445	3,555	225	3,931	8 x M24	FS-MO-280-15000-3B
16,500	165.0	2,800	3,695	3,805	225	4,124	8 x M24	FS-MO-280-16500-3B
18,000	180.0	2,800	3,945	4,055	225	4,323	8 x M24	FS-MO-280-18000-3B
21,000	210.0	2,800	4,445	4,555	225	4,735	8 x M24	FS-MO-280-21000-3B
24,000	240.0	2,800	4,945	5,055	225	5,168	8 x M24	FS-MO-280-24000-3B
25,500	255.0	2,800	5,195	5,305	225	5,389	8 x M24	FS-MO-280-25500-3B
27,000	270.0	2,800	5,445	5,555	225	5,614	8 x M24	FS-MO-280-27000-3B
28,500	285.0	2,800	5,695	5,805	225	5,844	8 x M30	FS-MO-280-28500-3B
31,500	315.0	2,800	6,195	6,305	225	6,311	8 x M30	FS-MO-280-31500-3B
33,000	330.0	2,800	6,445	6,555	225	6,548	8 x M30	FS-MO-280-33000-3B
34,500	345.0	2,800	6,695	6,805	225	6,786	8 x M30	FS-MO-280-34500-3B
36,000	360.0	2,800	6,945	7,055	225	7,026	8 x M30	FS-MO-280-36000-3B
37,500	375.0	2,800	7,195	7,305	225	7,267	8 x M30	FS-MO-280-37500-3B
40,800	408.0	2,800	7,695	7,805	225	7,779	8 x M30	FS-MO-280-40800-3B

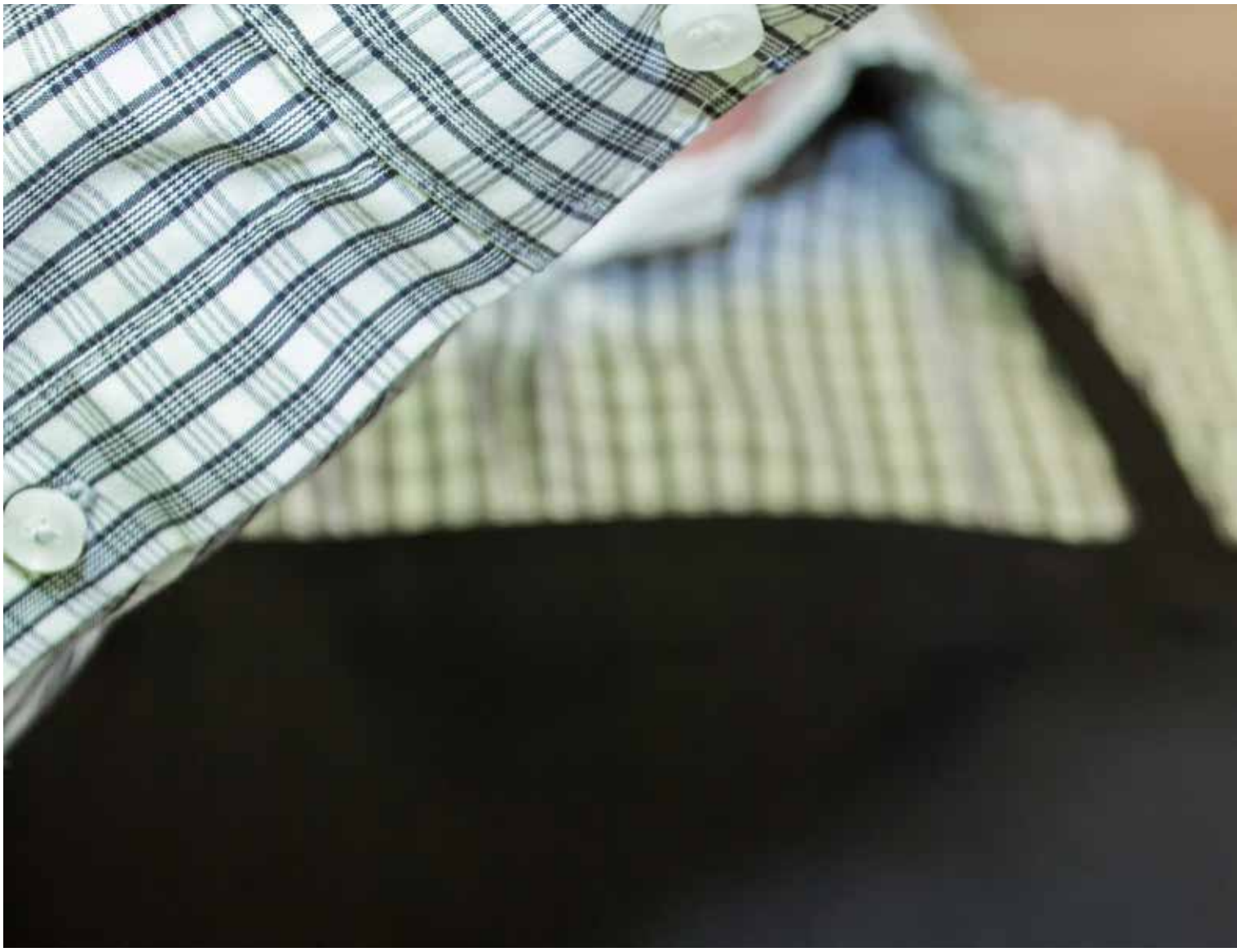

PRESSURE TANK FS-MO-3B Ø 3,000 MM

Capacity litres	Capacity hl	ø mm	h1 mm	H mm	h2 mm	D1 mm	HV	Order No.
14,100	141.0	3,000	2,970	3,120	225	3,695	8 x M24	FS-MO-300 -14100-3B
16,000	160.0	3,000	3,220	3,370	225	3,867	8 x M24	FS-MO-300 -16000-3B
17,500	175.0	3,000	3,470	3,620	225	4,046	8 x M24	FS-MO-300 -17500-3B
19,500	195.0	3,000	3,720	3,870	225	4,233	8 x M24	FS-MO-300 -19500-3B
21,000	210.0	3,000	3,970	4,120	225	4,427	8 x M24	FS-MO-300 -21000-3B
23,000	230.0	3,000	4,220	4,370	225	4,625	8 x M24	FS-MO-300-23000-3B
24,500	245.0	3,000	4,470	4,620	225	4,829	8 x M24	FS-MO-300-24500-3B
28,000	280.0	3,000	4,970	5,120	225	5,248	8 x M24	FS-MO-300-28000-3B
30,000	300.0	3,000	5,220	5,370	225	5,463	8 x M24	FS-MO-300-30000-3B
31,500	315.0	3,000	5,470	5,620	225	5,686	8 x M24	FS-MO-300 -31500-3B
33,500	335.0	3,000	5,720	6,120	225	6,187	8 x M24	FS-MO-300-33500-3B
37,000	370.0	3,000	6,220	6,370	225	6,414	10 x M30	FS-MO-300-37000-3B
38,500	385.0	3,000	6,420	6,620	225	6,645	10 x M30	FS-MO-300-38500-3B
42,000	420.0	3,000	6,970	7,120	225	7,112	10 x M30	FS-MO-300-42000-3B
44,000	440.0	3,000	7,220	7,370	225	7,349	10 x M30	FS-MO-300-44000-3B
47,500	475.0	3,000	7,720	7,870	225	7,826	10 x M30	FS-MO-300-47500-3B
49,000	490.0	3,000	7,970	8,120	225	8,066	10 x M30	FS-MO-300-49000-3B