» Fermentation and storage barrel UF

Our fermentation and storage barrel UF can also be called universal barrel. Its use is really multifunctional. Mostly it is used for fermentation and storage, but also for the blending and transportation of liquids. Yet, also the air-tight storage of individual ingredients like for example special kinds of malt or hop are possible.

Our clients have already shown us the most curious application purposes and sometimes we are surprised ourselves about how versatile this barrel really is. In any case: due to its high quality surface and overall outstanding quality, the barrel is always easy to clean!

APPLICATION RANGE (PRESSURELESS)

› Fermentation
› Storage

Ideal for
› Beer
› Malt
› Yeast
› Other beverages

STANDARD EQUIPMENT FOR FERMENTATION AND STORAGE BARREL UF

- Tank made of stainless steel AISI 304
- Inside and outside surface IIId
- Tightly closing tension ring lid with silicone seal
- Plastic screw connection with blind cap for fermentation top piece
- Two stainless steel carrying handles
- Outlet internal thread G ¾" with plastic blank plug

DIMENSIONS OF FERMENTATION AND STORAGE BARREL UF

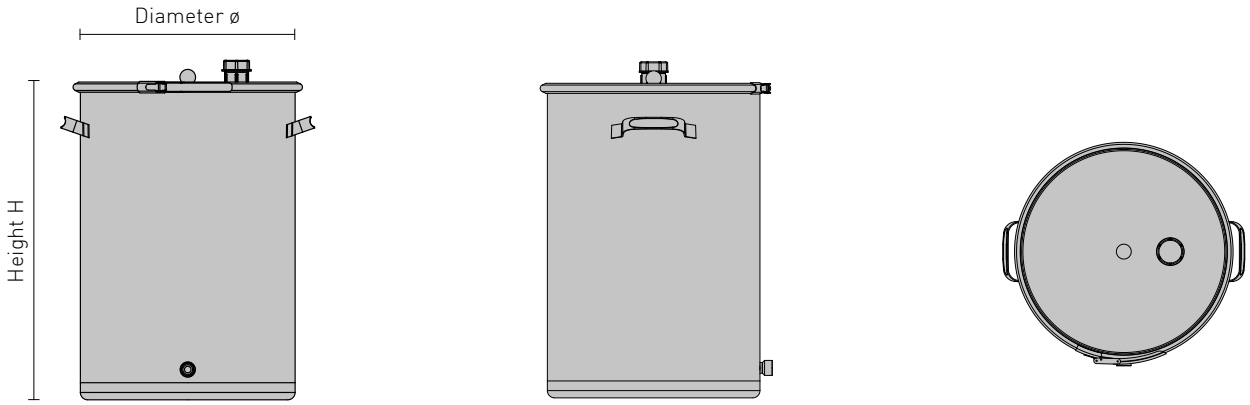

Capacity litres	Height mm	ø mm	Weight kg	Order No.
45	550	350	6	UF-035
95	680	440	9	UF-044

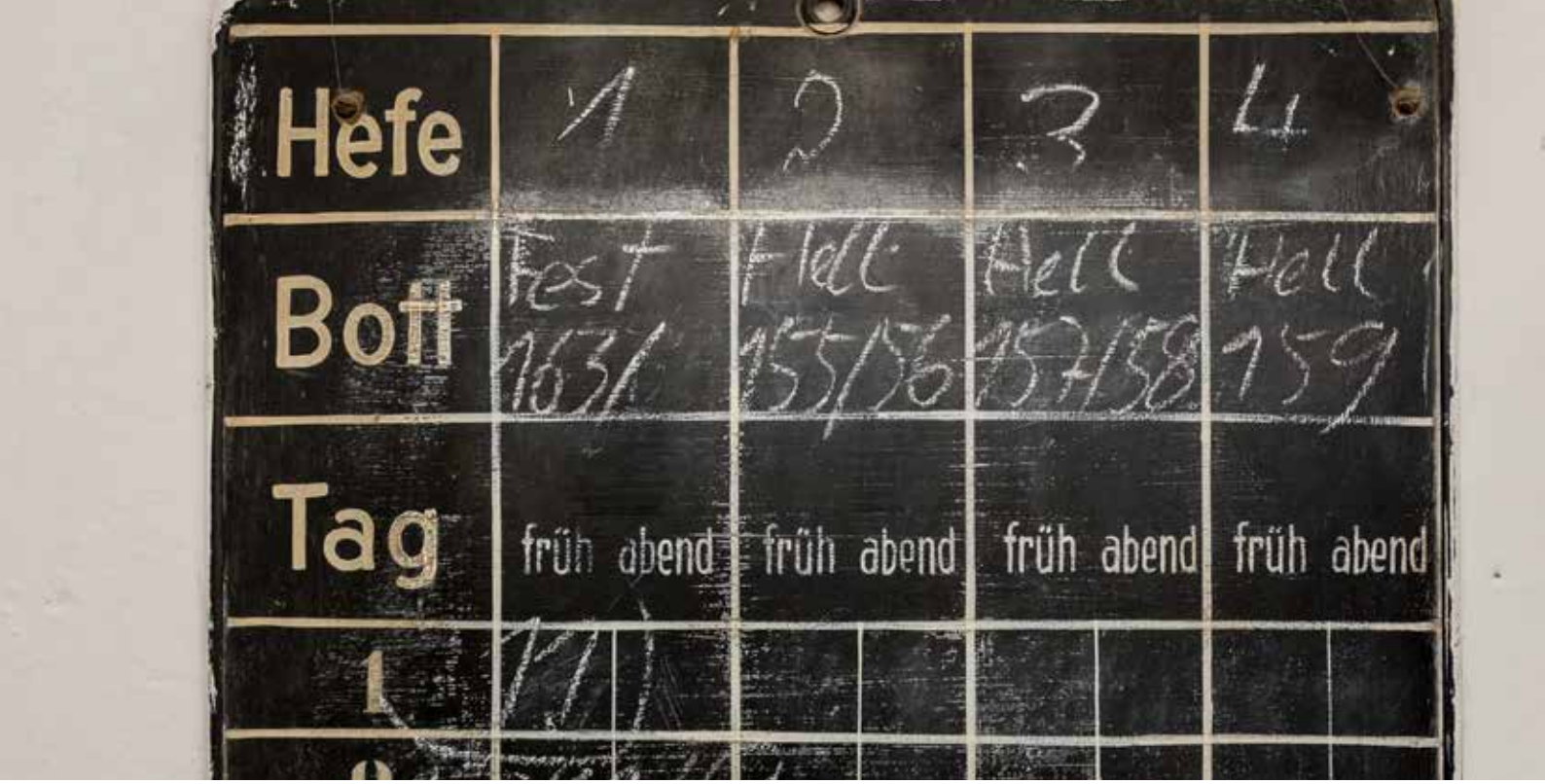

» Fermentation and storage tank BD

The fermentation and storage tank BD is completely made of AISI 304. The tank's resistant walls, its excellent finishing and stability are typical of Speidel's characteristic quality.

The practical top opening simplifies the cleaning and the flat tank bottom allows the tank to be put on pedestals or base frames.

APPLICATION RANGE (PRESSURELESS)

› Fermentation
› Storage

Ideal for
› Beer
› Spirits
› Fermented beverages

STANDARD EQUIPMENT FERMENTATION AND STORAGE TANK BD

- AISI 304 stainless steel, surface IIld (2R), marbled outside
- Vaulted tank top, with filling dome 220 mm
- Lid with drilled hole ø 38 mm and removable plastic blank cap to hold the fermentation lock with bung
- Flat tank bottom

RACKING OUTLET

- Up to 240 litres capacity internal thread G 3/4" (BSP) with plastic blank cap
- From 320 litres capacity upwards external thread G 1" (BSP) with plastic blank cap

DIMENSIONS OF FERMENTATION AND STORAGE TANK BD

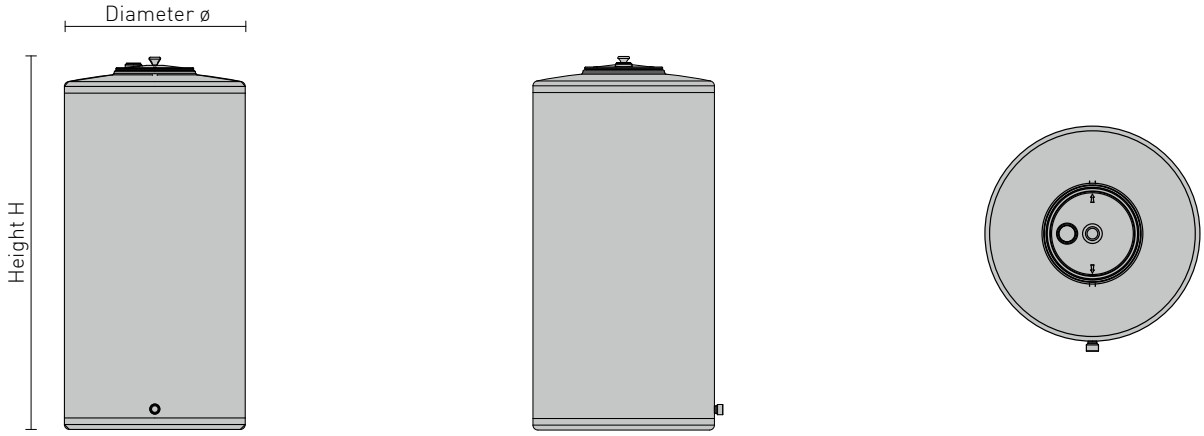

Capacity litres	ø mm	H mm	Order No.
100	440	758	BD-044-100
240	550	1,141	BD-055-240
320	630	1,153	BD-063-320

» Fermentation and storage tank FD

The storage tank FD is entirely made of AISI 304, too. In contrast to storage tank BD, the FD is equipped with welded-on stainless steel legs and an additional bottom outlet.

The FD's bottom and top are both vaulted. This is why it stands on three legs, thus allowing easy operation. The FD is available for capacities up to 625 litres.

APPLICATION RANGE (PRESSURELESS)

› Fermentation
› Storage

Ideal for
› Beer
› Spirits
› Fermented beverages

STANDARD EQUIPMENT FERMENTATION AND STORAGE TANK FD

- AISI304 stainless steel, surface IIld (2R), marbled outside
- Vaulted tank top and bottom
- Filling dome in tank top 220 mm
- Lid with drilled hole ø 38 mm and removable plastic blank cap to hold fermentation lock and bung
- Standing on three legs

RACKING OUTLET

- Up to 240 litres capacity internal thread G 3/4" (BSP) with plastic blank cap
- From 330 litres capacity upwards external thread G 1" (BSP) with plastic blank cap

BOTTOM OUTLET

- Up to 240 litres capacity bottom outlet neck internal thread G 3/4" (BSP) with plastic blank cap
- From 330 litres capacity upwards bottom outlet neck external thread G 1" (BSP) with plastic blank cap

DIMENSIONS OF FERMENTATION AND STORAGE TANK FD

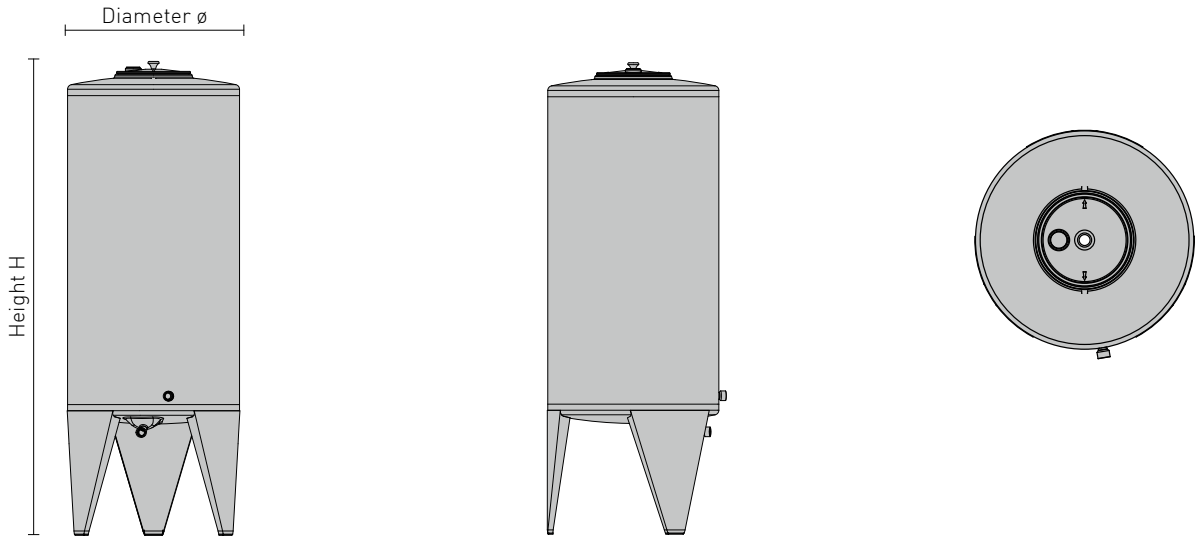

Capacity litres	ø mm	H mm	Order No.
100	440	1,141	FD-044-100
240	550	1,524	FD-055-240
330	630	1,538	FD-063-330
525	820	1,466	FD-082-525
625	820	1,661	FD-082-625

» Fermentation and storage tank FD-S

For the fermentation of smaller quantities of beer we recommend the fermentation barrel FD-S, a very stable barrel on three legs, entirely made of stainless steel. Its special 3D inner surfaces make cleaning very easy.

The FD-S comes with a serial double jacket. Thus, the producers of bottom-fermented beers for example can directly connect the double jacket to a cooling unit.

APPLICATION RANGE (PRESSURELESS)

› Fermentation
› Maturation
› Storage

Ideal for
› Beer

STANDARD EQUIPMENT FERMENTATION AND STORAGE TANK FD-S

- Tank shell made of AISI 304 stainless steel, surface Illd (2R), marbled outside
- Tank top made of AISI 304 stainless steel, surface Illd (2R), marbled outside
- Vaulted tank top
- Filling dome on barrel top 220 mm LW
- Lid with drill hole ø 38 mm and removable plastic blind cap to hold the fermentation lock and plug
- Standing on three legs

RACKING OUTLET

- Up to a volume of 120 litres internal thread G 3/4" with plastic blind plug
- From a volume of 330 litres onward external thread G 1" with plastic-blind cap

TOTAL OUTLET

- Up to a volume of 240 litres total outlet neck internal thread G 3/4" with plastic blank bung
- From a volume of 330 litres total outlet neck external thread G 1" with plastic blank bung

DOUBLE JACKET

- Laser welded double jacket for cooling with two connecting nozzle G 1" with external thread

TEMPERATURE

- Weld-on thread NW 10 DIN 11851 for temperature measuring

DIMENSIONS OF FERMENTATION AND STORAGE TANK FD-S

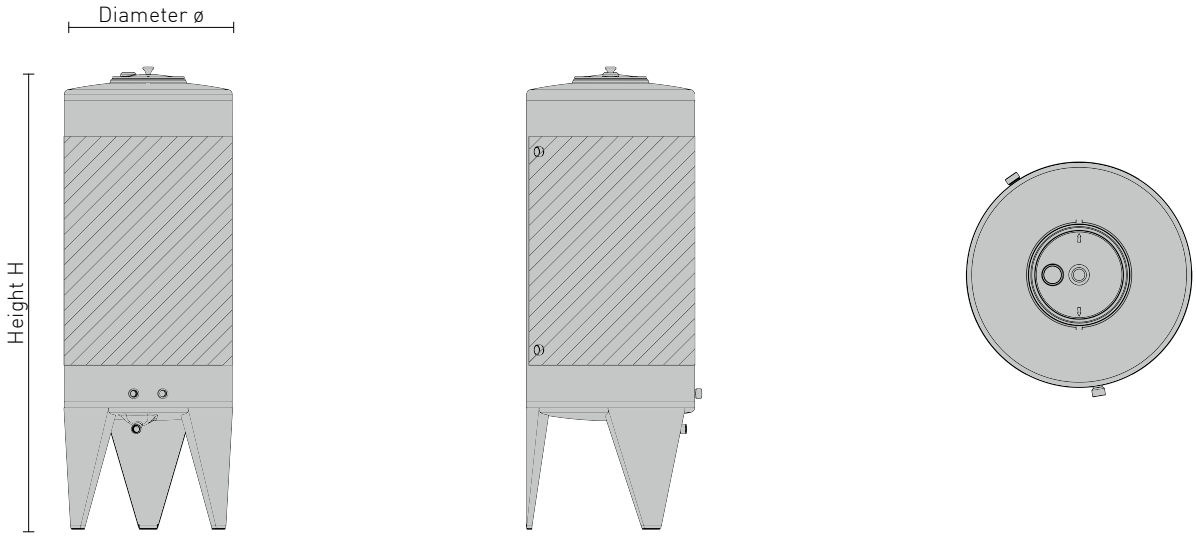

Capacity litres	ø mm	H mm	Order No.
60	440	891	FD-044-S-V0019
120	440	1,266	FD-044-S-V0020
240	550	1,524	FD-055-S-V0047
525	820	1,466	FD-082-S-V0067
625	820	1,661	FD-082-S-V0068

» Fermentation and storage tank FD-ZKG

For the fermentation of smaller quantities of beer we recommend the fermentation tank FD-ZKG, a very stable barrel on three legs, entirely made of stainless steel. Its special 3D inner surfaces make cleaning very easy.

The FD-ZKG comes with a serial double jacket. Thus, the producers of bottom-fermented beers for example can directly connect the double jacket to a cooling unit.

APPLICATION RANGE (PRESSURELESS)

- Fermentation
- Maturation
- Storage

Ideal for
- Beer

STANDARD EQUIPMENT FERMENTATION AND STORAGE TANK FD-ZKG

- Tank shell made of AISI 304 stainless steel, surface IIId (2R), marbled outside
- Tank top made of AISI 304 stainless steel, surface IIId (2R), marbled outside
- Vaulted tank top
- Filling dome on tank top 220 mm LW
- Lid with drill hole ø 38 mm and removable plastic blank bung to hold the fermentation lock and plug
- Standing on three legs

RACKING OUTLET

- Up to a volume of 120 litres internal thread G 3/4" with plastic blind plug
- From a volume of 330 litres onward external thread G 1" with plastic-blind cap

BOTTOM OUTLET

- Up to a volume of 240 litres bottom outlet neck internal thread G 3/4" with plastic blank bung
- From a volume of 330 litres bottom outlet neck external thread G 1" with plastic blank bung

DOUBLE JACKET

- Laser welded double jacket for cooling with two connecting nozzle G 1" with external thread

TEMPERATURE

- Weld-on thread NW 10 DIN 11851 for temperature measuring

DIMENSIONS OF FERMENTATION AND STORAGE TANK FD-ZKG

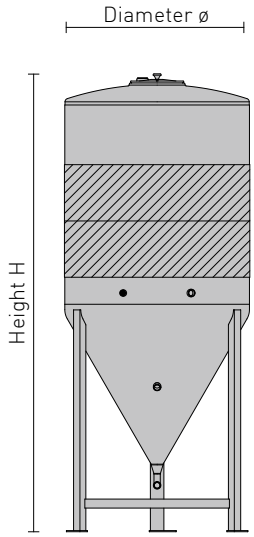

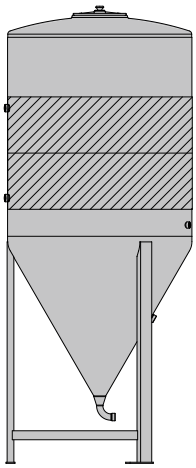

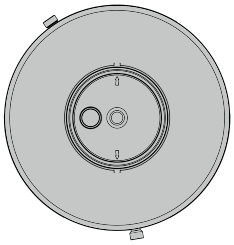

Capacity	ø	H	Order No.
litres	mm	mm	
120	550	1,255	FD-055-S-V0059
240	550	1,675	FD-055-S-V0030
625	820	2,044	FD-082-S-V0054

» Fermentation and storage tank base tank FS-MO stacking tank AS-MO

The FS-MO base tank is a typical, round, upright standing fermentation and storage tank made of high quality stainless steel. Together with the corresponding stacking tank AS-MO, the FS-MO has been satisfying our clients for decades. Being the all-rounders they are, both tanks can be used for almost all kinds of applications and processes in the production of beverages, whether it is about storage, fermentation or maturation.

Our tanks live up to their promises: they all have perfect weld seams, an accurately sealing manhole and are all easy to clean. By default the tank top is executed in AISI 316.

If you don't need to stack immediately: no problem! The base tank can be extended with a stacking tank also at a later date. Provided that the maximum total volume per stack is not exceeded, the two tanks can be combined without problems even when they are different sizes. (see page 38).

APPLICATION RANGE (PRESSURELESS)

- Storage
- Maturation
- Fermentation
- Mixing/Blending
- Processes

Ideal for
- Beer
- Soft drinks
- Alcoholic drinks

STANDARD EQUIPMENT BASE TANK FS-MO / STACKING TANK AS-MO

- Tank shell and tank bottom made of AISI 304 stainless steel, surface IIId (2R), marbled outside
- Tank top made of AISI 316 stainless steel, surface IIId (2R), marbled outside
- From tank-ø of 1,000 mm upwards with lifting lugs
- Tanks from 2,000 mm tank height upwards and stacking tanks with ladder safety bow
- Vaulted, stable tank top with moulded-on forward up-slope for complete filling and ventilation assuring a very small air contact area
- Moulded connection neck with filling and vent neck external thread NW 50 Rd 78 x 1/6"
- Free-standing base tank on three welded-on legs
- Stacking tank with three welded-on stacking legs

SAMPLING

- Weld-on thread NW 10 DIN 11851 with sealing cap (for the installation of sampling tap)

MANHOLE

- Stable manhole neck seamlessly moulded from the tank shell
- Up to 320 litres capacity 320 x 250 mm
- From 525 litres capacity upwards 420 x 320 mm
- Door with butterfly bow and hand wheel

RACKING OUTLET

- Plain surface with drilled hole ø 48 mm (to hold flap valve Gr. 37 or weld-on thread NW 40, NW 50 DIN 11851)
- Up to 320 litres capacity fixed racking outlet plain surface
- From 525 litres capacity upwards with welded-on reinforcing plate

FILL LEVEL

- Weld-on thread NW 10 DIN 11851 with sealing cap including fastening points on tank shell (for installation of fill level indicator)

BOTTOM OUTLET

- Vaulted, stable tank bottom with integrally moulded forward down-slope for complete draining with moulded connection neck, impeding suction effect with bottom outlet neck
- Up to 820 mm ø NW 40 DIN 11851
- From 1,000 mm ø NW 50 DIN 11851

SET-UP EXAMPLE FOR BASE TANK FS-MO/STACKING TANK AS-MO

Item	Order No.
 **Base tank FS-MO-120-1000 litres**	
› h1 = approx. 1,267 mm	
› Standard equipment as on page 35	FS-MO-120-1000
 **Stacking tank AS-MO-120-2000 litres**	
› h5 = 1,916 mm, H = 1,267 (h1) + 60 (h4) + 1916 (h5) = 3,243 mm, Hges = 3,243 (H), 80 (connection) + approx. 100 (height compensation) = approx. 3,423 mm	AS-MO-100-2000
› Standard equipment as on page 35	
 **Sampling (page 133)**	
› With sampling tap NW 10 DIN 11851	64949
 **Racking outlet (page 133)**	
› Welded gland with thread NW 50 DIN 11851	KA-120D
› With disc valve NW 50 DIN 11851	64945
 **Fill level (page 138)**	
› Mounted fill level indicator NW 10	FS-130H
 **Bottom outlet (page 138)**	
› With yeast plug	HS-100A
› With butterfly valve NW 50 DIN 11851	64945
 **Temperature measurement (page 138)**	
› Bi-metal dial thermometer ø 100 mm, measuring range -20 °C to +60 °C	
› Screwed sleeve for thermometer length = 125 mm	TM-140C
 **Heating and cooling jacket for base tank (page 104)**	
› Double jacket A2 1,3 m² with welded gland thread G 1" for connection to available warm water/cold water source	
› Version 1, Layout 15, connection position A1	1A1
 **Heating and cooling jacket for stacking tank (page 104)**	
› Double jacket A2 1,3 m² with welded gland thread G 1" for connection to available warm water/cold water source	
› Version 1, layout 15, connection position A1	1A1
 **Adjustable feet (page 142)**	
› With adjustable feet for tank legs (H = + approx. 100 mm)	46127

DIMENSIONS OF BASE TANK FS-MO/STACKING TANK AS-MO

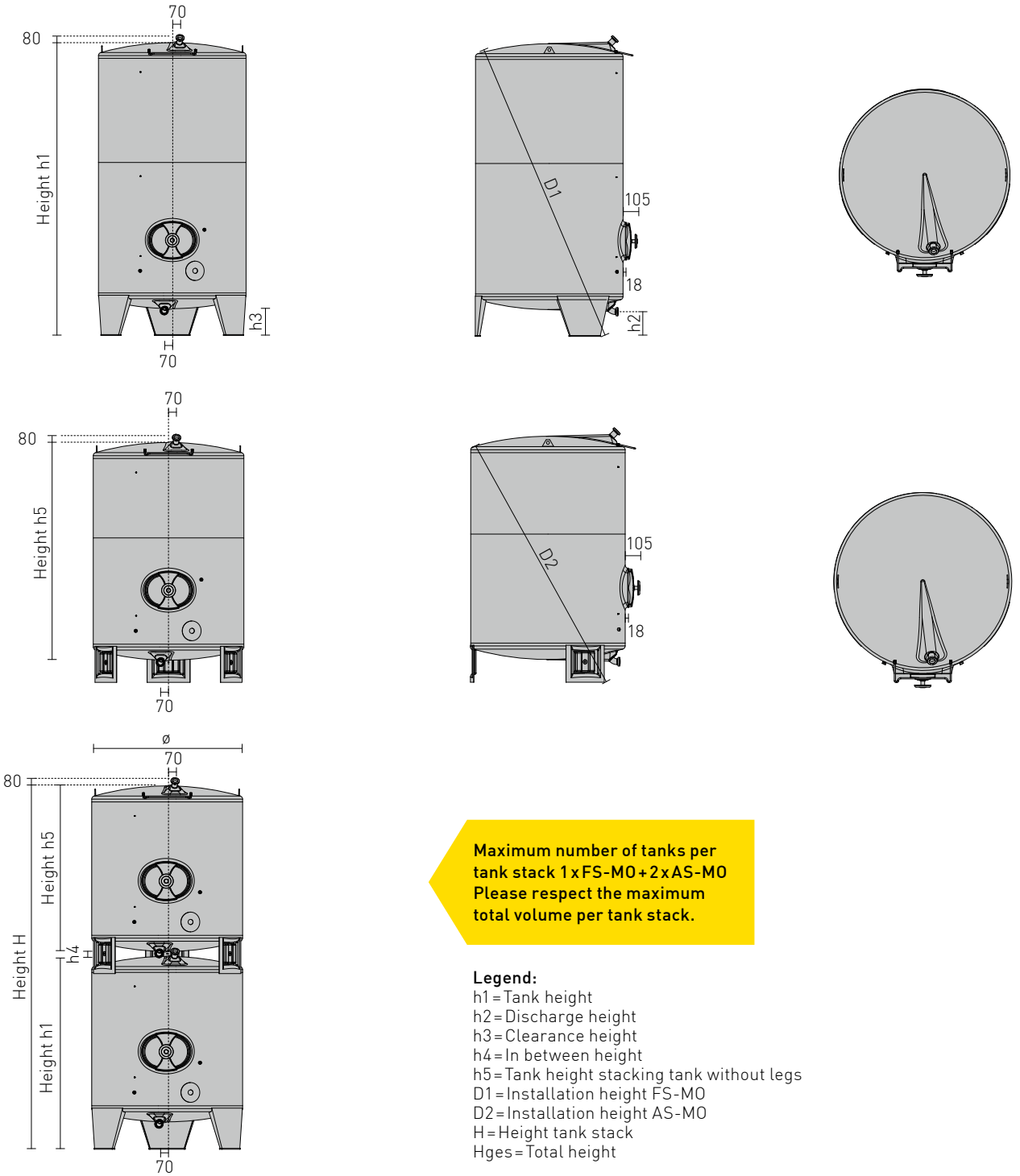

Maximum number of tanks per tank stack 1 x FS-MO + 2 x AS-MO Please respect the maximum total volume per tank stack.

Legend:
h1 = Tank height
h2 = Discharge height
h3 = Clearance height
h4 = In between height
h5 = Tank height stacking tank without legs
D1 = Installation height FS-MO
D2 = Installation height AS-MO
H = Height tank stack
Hges = Total height

Intermediate sizes available

In case of 820 mm ø a 10 mm shell height equates to = 5.30 litres tank volume
In case of 1,000 mm ø a 10 mm shell height equates to = 7.80 litres tank volume
In case of 1,200 mm ø a 10 mm shell height equates to = 11.30 litres tank volume
In case of 1,400 mm ø a 10 mm shell height equates to = 15.30 litres tank volume
In case of 1,600 mm ø a 10 mm shell height equates to = 20.00 litres tank volume
In case of 1,800 mm ø a 10 mm shell height equates to = 25.30 litres tank volume
In case of 2,000 mm ø a 10 mm shell height equates to = 31.20 litres tank volume

Pricing for intermediate sizes

for intermediate sizes the price of the next larger size will apply (plus customization costs)

Option: Tank contact parts made of AISI 316 stainless steel

Surface IIId (2R), marbled outside on special request

Brushed outer finish

on special request

BASE TANK FS-MO/STACKING TANK AS-MO: TANK Ø 820 MM

Capacity	ø	h1	h2	h3	h4	h5	D1	D2	H	Order No.	Order No.
litres	mm	mm	mm	mm	mm	mm	mm	mm	mm	Tank 1 FS-MO	Tank 2–3 AS-MO
320	820	914	205	230	84	684	1,075	1,100	*	FS1-MO-082-0320	AS1-MO-082-0320
525	820	1,314	205	230	84	1,089	1,516	1,523	*	FS-MO-082-0525	AS-MO-082-0525
625	820	1,509	205	230	84	1,284	1,693	1,696	*	FS-MO-082-0625	AS-MO-082-0625
750	820	1,772	205	230	84	1,547	1,937	1,940	*	FS-MO-082-0750	AS-MO-082-0750
1,000	820	2,258	205	230	84	-	2,403	-	-	FS-MO-082-1000	-

Tank-ø 820 mm; maximum total volume per tank stack 1,265 litres

BASE TANK FS-MO/STACKING TANK AS-MO: TANK Ø 1,000 MM

Capacity	ø	h1	h2	h3	h4	h5	D1	D2	H	Order No.	Order No.
litres	mm	mm	mm	mm	mm	mm	mm	mm	mm	Tank 1 FS-MO	Tank 2–3 AS-MO
650	1,000	1,205	210	239	115	966	1,438	1,460	*	FS-MO-100-0650	AS-MO-100-0650
850	1,000	1,455	210	239	115	1,216	1,645	1,665	*	FS-MO-100-0850	AS-MO-100-0850
1,050	1,000	1,705	210	239	115	1,466	1,863	1,882	*	FS-MO-100-1050	AS-MO-100-1050
1,250	1,000	1,955	210	239	115	1,716	2,088	2,106	*	FS-MO-100-1250	AS-MO-100-1250
1,400	1,000	2,193	210	239	115	-	2,307	-	-	FS-MO-100-1400	-
1,550	1,000	2,318	210	239	115	-	2,424	-	-	FS-MO-100-1550	-
1,800	1,000	2,693	210	239	115	-	2,778	-	-	FS-MO-100-1800	-
2,000	1,000	2,943	210	239	115	-	3,017	-	-	FS-MO-100-2000	-
2,200	1,000	3,193	210	239	115	-	3,257	-	-	FS-MO-100-2200	-
2,350	1,000	3,443	210	239	115	-	3,499	-	-	FS-MO-100-2350	-
2,500	1,000	3,556	210	239	115	-	3,609	-	-	FS-MO-100-2500	-

Tank-ø 1,000 mm; maximum total volume per tank stack 2,500 litres

BASE TANK FS-MO/STACKING TANK AS-MO: TANK Ø 1,200 MM

Capacity	ø	h1	h2	h3	h4	h5	D1	D2	H	Order No.	Order No.
litres	mm	mm	mm	mm	mm	mm	mm	mm	mm	Tank 1 FS-MO	Tank 2–3 AS-MO
1,000	1,200	1,267	230	257	60	1,010	1,579	1,546	*	FS-MO-120-1000	AS-MO-120-1000
1,300	1,200	1,517	230	257	60	1,260	1,775	1,739	*	FS-MO-120-1300	AS-MO-120-1300
1,550	1,200	1,767	230	257	60	1,510	1,984	1,946	*	FS-MO-120-1550	AS-MO-120-1550
1,800	1,200	2,017	230	257	60	1,760	2,201	2,162	*	FS-MO-120-1800	AS-MO-120-1800
2,000	1,200	2,173	230	257	60	1,916	2,329	2,300	*	FS-MO-120-2000	AS-MO-120-2000
2,100	1,200	2,255	230	257	60	1998	2,414	2,375	*	FS-MO-120-2100	AS-MO-120-2100
2,350	1,200	2,505	230	257	60	-	2,642	-	-	FS-MO-120-2350	-
2,500	1,200	2,630	230	257	60	-	2,758	-	-	FS-MO-120-2500	-
2,650	1,200	2,755	230	257	60	-	2,874	-	-	FS-MO-120-2650	-
3,000	1,200	3,087	230	257	60	-	3,186	-	-	FS-MO-120-3000	-
3,200	1,200	3,255	230	257	60	-	3,346	-	-	FS-MO-120-3200	-
3,500	1,200	3,505	230	257	60	-	3,584	-	-	FS-MO-120-3500	-
3,750	1,200	3,743	230	257	60	-	3,813	-	-	FS-MO-120-3750	-
4,000	1,200	3,993	230	257	60	-	4,054	-	-	FS-MO-120-4000	-
4,300	1,200	4,243	230	257	60	-	4,297	-	-	FS-MO-120-4300	-
4,600	1,200	4,493	230	257	60	-	4,540	-	-	FS-MO-120-4600	-

Tank-ø 1,200 mm; maximum total volume per tank stack 3,400 litres

BASE TANK FS-MO/STACKING TANK AS-MO TANK: Ø 1,400 MM

Capacity litres	ø mm	h1 mm	h2 mm	h3 mm	h4 mm	h5 mm	D1 mm	D2 mm	H mm	Order No. Tank 1 FS-MO	Order No. Tank 2–3 AS-MO
1,400	1,400	1,293	240	248	40	1,042	1,711	1,756	*	FS-MO-140-1400	AS-MO-140-1400
1,750	1,400	1,543	240	248	40	1,292	1,894	1,928	*	FS-MO-140-1750	AS-MO-140-1750
2,150	1,400	1,793	240	248	40	1,542	2,092	2,117	*	FS-MO-140-2150	AS-MO-140-2150
2,500	1,400	2,043	240	248	40	1,792	2,300	2,317	*	FS-MO-140-2500	AS-MO-140-2500
2,850	1,400	2,281	240	248	40	2,030	2,505	2,516	*	FS-MO-140-2850	AS-MO-140-2850
3,000	1,400	2,373	240	248	40	2,122	2,586	2,595	*	FS-MO-140-3000	AS-MO-140-3000
3,200	1,400	2,531	240	248	40	-	2,726	-	-	FS-MO-140-3200	-
3,600	1,400	2,781	240	248	40	-	2,952	-	-	FS-MO-140-3600	-
4,000	1,400	3,031	240	248	40	-	3,181	-	-	FS-MO-140-4000	-
4,400	1,400	3,281	240	248	40	-	3,414	-	-	FS-MO-140-4400	-
4,750	1,400	3,531	240	248	40	-	3,648	-	-	FS-MO-140-4750	-
5,100	1,400	3,769	240	248	40	-	3,874	-	-	FS-MO-140-5100	-
5,500	1,400	4,019	240	248	40	-	4,112	-	-	FS-MO-140-5500	-
5,850	1,400	4,269	240	248	40	-	4,351	-	-	FS-MO-140-5850	-
6,300	1,400	4,519	240	248	40	-	4,592	-	-	FS-MO-140-6300	-
6,700	1,400	4,769	240	248	40	-	4,833	-	-	FS-MO-140-6700	-

Tank-ø 1,400 mm; maximum total volume per tank stack 4,400 litres

BASE TANK FS-MO/STACKING TANK AS-MO Ø 1,600 MM

Capacity litres	ø mm	h1 mm	h2 mm	h3 mm	h4 mm	h5 mm	D1 mm	D2 mm	H mm	Order No. Tank 1 FS-MO	Order No. Tank 2–3 AS-MO
1,800	1,600	1,347	225	256	70	1,086	1,848	1,840	*	FS-MO-160-1800	AS-MO-160-1800
2,300	1,600	1,597	225	256	70	1,336	2,023	2,015	*	FS-MO-160-2300	AS-MO-160-2300
2,800	1,600	1,847	225	256	70	1,586	2,212	2,205	*	FS-MO-160-2800	AS-MO-160-2800
3,300	1,600	2,097	225	256	70	1,836	2,413	2,406	*	FS-MO-160-3300	AS-MO-160-3300
3,800	1,600	2,335	225	256	70	2,074	2,612	2,605	*	FS-MO-160-3800	AS-MO-160-3800
4,200	1,600	2,585	225	256	70	2,324	2,827	2,822	*	FS-MO-160-4200	AS-MO-160-4200
4,800	1,600	2,835	225	256	70	2,574	3,048	3,043	*	FS-MO-160-4800	AS-MO-160-4800
5,200	1,600	3,085	225	256	70	-	3,273	-	-	FS-MO-160-5200	-
5,800	1,600	3,335	225	256	70	-	3,501	-	-	FS-MO-160-5800	-
6,200	1,600	3,585	225	256	70	-	3,733	-	-	FS-MO-160-6200	-
6,700	1,600	3,823	225	256	70	-	3,955	-	-	FS-MO-160-6700	-
7,200	1,600	4,073	225	256	70	-	4,190	-	-	FS-MO-160-7200	-
7,700	1,600	4,323	225	256	70	-	4,427	-	-	FS-MO-160-7700	-
8,200	1,600	4,573	225	256	70	-	4,665	-	-	FS-MO-160-8200	-
8,700	1,600	4,823	225	256	70	-	4,905	-	-	FS-MO-160-8700	-
9,200	1,600	5,073	225	256	70	-	5,145	-	-	FS-MO-160-9200	-
9,700	1,600	5,311	225	256	70	-	5,375	-	-	FS-MO-160-9700	-
10,000	1,600	5,561	225	256	70	-	5,617	-	-	FS-MO-160-10000	-

Tank-ø 1,600 mm; maximum total volume per tank stack 10,000 litres
Since the legs of the stacking tank are welded with the top of the base tank only the entire tank stack can be purchased.
This way, the size h1 increases by 35 mm and size D1 by 170 mm.
Up to 6,200 litres capacity with standard legs, from 6,700 litres upwards with boxed, closed legs.

* **The respective height H is calculated as follows: H = h1 + h4 + h5**

BASE TANK FS-MO/STACKING TANK AS-MO: TANK Ø 1,800 MM

Capacity litres	ø mm	h1 mm	h2 mm	h3 mm	h4 mm	h5 mm	D1 mm	D2 mm	H mm	Order No. Tank 1 FS-MO	Order No. Tank 2–3 AS-MO
2,400	1,800	1,369	225	259	70	1,110	2,007	2,006	*	FS-MO-180 -2400	AS-MO-180-2400
3,000	1,800	1,619	225	259	70	1,360	2,171	2,168	*	FS-MO-180 -3000	AS-MO-180-3000
3,600	1,800	1,869	225	259	70	1,610	2,350	2,346	*	FS-MO-180 -3600	AS-MO-180-3600
4,200	1,800	2,119	225	259	70	1,860	2,541	2,536	*	FS-MO-180 -4200	AS-MO-180-4200
4,800	1,800	2,357	225	259	70	2,098	2,732	2,726	*	FS-MO-180 -4800	AS-MO-180-4800
5,500	1,800	2,607	225	259	70	2,348	2,940	2,933	*	FS-MO-180 -5500	AS-MO-180-5500
6,100	1,800	2,857	225	259	70	2,598	3,154	3,147	*	FS-MO-180 -6100	AS-MO-180 -6100
6,700	1,800	3,107	225	259	70	2,848	3,373	3,366	*	FS-MO-180 -6700	AS-MO-180 -6700
7,300	1,800	3,357	225	259	70	3,098	3,596	3,588	*	FS-MO-180 -7300	AS-MO-180 -7300
8,000	1,800	3,607	225	259	70	3,348	3,823	3,815	*	FS-MO-180 -8000	AS-MO-180-8000
8,500	1,800	3,845	225	259	70	3,586	4,041	4,032	*	FS-MO-180 -8500	AS-MO-180-8500
9,200	1,800	4,095	225	259	70	3,836	4,272	4,264	*	FS-MO-180 -9200	AS-MO-180-9200
9,800	1,800	4,345	225	259	70	4,086	4,506	4,497	*	FS-MO-180 -9800	AS-MO-180-9800
10,400	1,800	4,595	225	259	70	-	4,741	-	-	FS-MO-180-10400	-
11,000	1,800	4,845	225	259	70	-	4,977	-	-	FS-MO-180-11000	-
11,600	1,800	5,095	225	259	70	-	5,215	-	-	FS-MO-180-11600	-
12,200	1,800	5,333	225	259	70	-	5,443	-	-	FS-MO-180-12200	-
12,800	1,800	5,583	225	259	70	-	5,682	-	-	FS-MO-180-12800	-
13,500	1,800	5,833	225	259	70	-	5,923	-	-	FS-MO-180-13500	-
14,000	1,800	6,083	225	259	70	-	6,164	-	-	FS-MO-180-14000	-
14,700	1,800	6,333	225	259	70	-	6,407	-	-	FS-MO-180-14700	-
15,300	1,800	6,583	225	259	70	-	6,649	-	-	FS-MO-180-15300	-

Tank-ø 1,800 mm; maximum total volume per tank stack 12,500 litres

Since the legs of the stacking tank are welded with the top of the base tank only the entire tank stack can be purchased.

This way, the size h1 increases by 30 mm and size D1 by 180 mm.

Up to 8,000 litres capacity with standard legs, from 8,500 litres upwards with boxed, closed legs.

BASE TANK FS-MO/STACKING TANK AS-MO: TANK Ø 2,000 MM

Capacity litres	ø mm	h1 mm	h2 mm	h3 mm	h4 mm	h5 mm	D1 mm	D2 mm	H mm	Order No. Tank 1 FS-MO	Order No. Tank 2–3 AS-MO
3,000	2,000	1,428	225	260	100	1,168	2,148	2,237	*	FS-MO-200 -3000	AS-MO-200 -3000
3,800	2,000	1,678	225	260	100	1,418	2,305	2,393	*	FS-MO-200 -3800	AS-MO-200 -3800
4,600	2,000	1,928	225	260	100	1,668	2,478	2,564	*	FS-MO-200 -4600	AS-MO-200 -4600
5,300	2,000	2,178	225	260	100	1,918	2,663	2,747	*	FS-MO-200 -5300	AS-MO-200 -5300
6,100	2,000	2,416	225	260	100	2,156	2,849	2,931	*	FS-MO-200 -6100	AS-MO-200 -6100
6,800	2,000	2,666	225	260	100	2,406	3,052	3,132	*	FS-MO-200 -6800	AS-MO-200 -6800
7,600	2,000	2,916	225	260	100	2,656	3,261	3,340	*	FS-MO-200 -7600	AS-MO-200 -7600
8,400	2,000	3,166	225	260	100	2,906	3,476	3,553	*	FS-MO-200 -8400	AS-MO-200 -8400
9,200	2,000	3,416	225	260	100	3,156	3,695	3,771	*	FS-MO-200 -9200	AS-MO-200 -9200
10,000	2,000	3,666	225	260	100	3,406	3,918	3,992	*	FS-MO-200-10000	AS-MO-200-10000
10,600	2,000	3,904	225	260	100	-	4,133	-	-	FS-MO-200-10600	-
11,400	2,000	4,154	225	260	100	-	4,362	-	-	FS-MO-200-11400	-
12,200	2,000	4,404	225	260	100	-	4,592	-	-	FS-MO-200-12200	-
13,000	2,000	4,654	225	260	100	-	4,825	-	-	FS-MO-200-13000	-
13,700	2,000	4,904	225	260	100	-	5,059	-	-	FS-MO-200-13700	-
14,500	2,000	5,154	225	260	100	-	5,295	-	-	FS-MO-200-14500	-
15,200	2,000	5,392	225	260	100	-	5,521	-	-	FS-MO-200-15200	-
16,000	2,000	5,642	225	260	100	-	5,759	-	-	FS-MO-200-16000	-
16,800	2,000	5,892	225	260	100	-	5,998	-	-	FS-MO-200-16800	-
17,500	2,000	6,142	225	260	100	-	6,238	-	-	FS-MO-200-17500	-
18,300	2,000	6,392	225	260	100	-	6,479	-	-	FS-MO-200-18300	-
19,000	2,000	6,642	225	260	100	-	6,720	-	-	FS-MO-200-19000	-
20,000	2,000	6,880	225	260	100	-	6,950	-	-	FS-MO-200-20000	-

Tank-ø 2,000 mm; maximum total volume per tank stack 16,300 litres
Since the legs of the stacking tank are welded with the top of the base tank only the entire tank stack can be purchased.
This way, the size h1 increases by 60 mm and size D1 by 220 mm.
Up to 10,000 litres capacity with standard legs, from 10,600 litres upwards with boxed, closed legs.

*** The respective height H is calculated as follows: H = h1 + h4 + h5**

» Fermentation and storage tank FS-MO

When it comes to larger tanks over 2,000 mm diameter the renowned Speidel quality is all that counts. And this is not only true for the production of tanks, but also for the planning, development and installation of large facilities.

Wineries and breweries appreciate our elaborate project planning and its smooth realization. We are responsive to our customers' individual needs also when it comes to larger installations. And also after the installation we are always ready to listen to you.

APPLICATION RANGE (PRESSURELESS)

- Storage
- Maturation
- Fermentation
- Mixing/Blending
- Processes

Ideal for

- Beer
- Soft drinks
- Alcoholic drinks

STANDARD EQUIPMENT FERMENTATION AND STORAGE TANK FS-MO

- Tank shell and tank bottom made of AISI 304 stainless steel, surface IIId (2R) / IIIc (2B)
- Tank top made of AISI 316 stainless steel, surface IIId (2R) / IIIc (2B)
- Tank shell and legs marbled outside
- With lifting lugs and ladder safety bow
- Vaulted, stable tank top, with filling and vent neck located in top centre, external thread NW 50 Rd 78 x 1/6"
- Free-standing on welded-on box-shaped legs – perfect stability and force transmission into the tank shell

SAMPLING

- Weld-on thread NW 10 DIN 11851 with sealing cap (for the installation of sampling tap)

MANHOLE UP TO Ø 3,000 MM

- Stable manhole neck seamlessly moulded from the tank shell 420 x 320 mm, door with butterfly bow and hand wheel

MANHOLE FROM Ø 3,200 MM UPWARDS

- Welded stable manhole neck 340 x 440 mm, door with swivelling handle and toggle nut

RACKING OUTLET

- Reinforcing plate with drilled hole ø 48 mm (to hold flap valve Gr. 37 or weld-on thread NW 40, NW 50 DIN 11851)

FILL LEVEL

- Weld-on thread NW 10 DIN 11851 with sealing cap on tank including fastening points on tank shell (for the installation of fill level indicator)

BOTTOM OUTLET

- Vaulted, stable tank bottom, in bottom centre with forward drawn discharge pipe and outlet with thread NW 50 DIN 11851

SET-UP EXAMPLE FOR FERMENTATION AND STORAGE TANK FS-MO

Item	Order No.
	
Base tank FS-MO-240-20000 litres	
› h1 = 5,270 mm, Hges = 5,270 (h1) + 320 (dome) + 150 (cleaning pipe) + approx. 100 (height compensation) = 5,840 mm	
› Standard equipment as on page 43	FS-MO-240-20000
	
Ventilation / Filling (page 130)	
› Filler neck NW 400 in tank top, positioned in upright, forward direction (with welded-on bead), H = + 320 mm	
› Flap lid with filler neck NW 50 external thread Rd 78 x 1/6"	OB-040T
	
Cleaning (page 133)	
› 360 ° cleaning spray head perforation with clip fastener including cleaning pipe with thread NW 40 DIN 11851, H = + 150 mm	RL-40B
› Spray head NW 40 detachable from outside	RL-41A
› Disc valve NW 40 DIN 11851	61375
	
Sampling (page 137)	
› With sampling tap NW 10 DIN 11851	64949
	
Racking outlet (page 133)	
› Welded gland with thread NW 50 DIN 11851	KA-120D
› With disc valve NW 50 DIN 11851	64945
	
Fill level (page 138)	
› Fill level indicator NW 10 mounted	FS-130K
	
Bottom outlet (page 133)	
› With disc valve NW 50 DIN 11851	64945
	
Temperature measurement (page 140)	
› Bi-metal dial thermometer ø 100 mm, measuring range - 20 °C to + 60 °C	
› Screwed sleeve for thermometer length = 125 mm	TM-140C
	
Heating and cooling jacket (page 104)	
› Double jacket B7 12,9 m² with welded gland thread G 1" for connection to available warm water / cold water source	
› Version 1, layout 35, connection position B7	1B7
	
Stirring device (page 142)	
› Stirring device flange mounted on the side of the tank shell DN200	
› Stirring device for mixing	FL-200A
	
Adjustable feet (page 142)	
› With adjustable feet for tank legs (H = + approx. 100 mm)	46129

DIMENSIONS OF FERMENTATION AND STORAGE TANK FS-MO

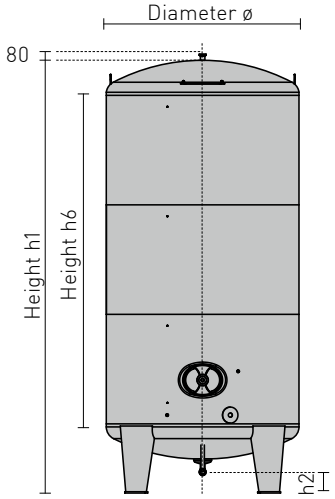

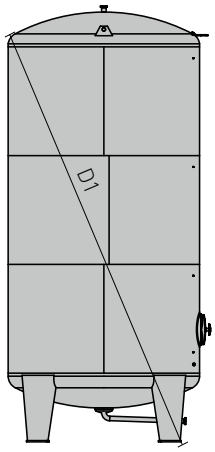

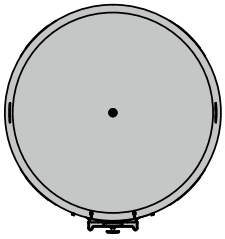

Legend:
h1 = Tank height
h2 = Discharge height
h6 = Shell height
D1 = Installation height
Hges = Overall height

FERMENTATION AND STORAGE TANK FS-MO: TANK Ø 2,200 MM

Capacity litres	ø mm	h1 mm	h2 mm	h6 mm	D1 mm	HV mm	Order No.
7,400	2,200	2,690	225	1,500	3,130	8 x M24	FS-MO-220 -7400
8,400	2,200	2,940	225	1,750	3,330	8 x M24	FS-MO-220 -8400
9,200	2,200	3,190	225	2,000	3,536	8 x M24	FS-MO-220 -9200
10,200	2,200	3,440	225	2,250	3,750	8 x M24	FS-MO-220-10200
11,000	2,200	3,690	225	2,500	3,965	8 x M24	FS-MO-220-11000
12,000	2,200	3,940	225	2,750	4,185	8 x M24	FS-MO-220-12000
13,000	2,200	4,190	225	3,000	4,410	8 x M24	FS-MO-220-13000
14,000	2,200	4,440	225	3,250	4,640	8 x M24	FS-MO-220-14000
15,000	2,200	4,690	225	3,500	4,875	8 x M24	FS-MO-220-15000
16,000	2,200	4,940	225	3,750	5,110	8 x M24	FS-MO-220-16000
16,800	2,200	5,190	225	4,000	5,350	8 x M24	FS-MO-220-16800
17,500	2,200	5,440	225	4,250	5,590	8 x M24	FS-MO-220-17500
18,500	2,200	5,690	225	4,500	5,830	8 x M24	FS-MO-220-18500
19,500	2,200	5,940	225	4,750	6,075	8 x M24	FS-MO-220-19500
20,500	2,200	6,190	225	5,000	6,320	8 x M24	FS-MO-220-20500
21,500	2,200	6,440	225	5,250	6,560	8 x M24	FS-MO-220-21500
22,500	2,200	6,690	225	5,500	6,810	8 x M24	FS-MO-220-22500
23,500	2,200	6,940	225	5,750	7,055	8 x M24	FS-MO-220-23500
24,500	2,200	7,190	225	6,000	7,300	8 x M24	FS-MO-220-24500
25,000	2,200	7,440	225	6,250	7,545	8 x M24	FS-MO-220-25000

FERMENTATION AND STORAGE TANK FS-MO: TANK Ø 2,400 MM

Capacity	ø	h1	h2	h6	D1	HV	Order No.
litres	mm	mm	mm	mm	mm	mm	
8,900	2,400	2,770	225	1,500	3,285	8 x M24	FS-MO-240 -8900
10,000	2,400	3,020	225	1,750	3,480	8 x M24	FS-MO-240-10000
11,200	2,400	3,270	225	2,000	3,680	8 x M24	FS-MO-240 -11200
12,300	2,400	3,520	225	2,250	3,890	8 x M24	FS-MO-240-12300
13,500	2,400	3,770	225	2,500	4,100	8 x M24	FS-MO-240-13500
14,500	2,400	4,020	225	2,750	4,320	8 x M24	FS-MO-240-14500
15,500	2,400	4,270	225	3,000	4,540	8 x M24	FS-MO-240-15500
16,500	2,400	4,520	225	3,250	4,765	8 x M24	FS-MO-240-16500
18,000	2,400	4,770	225	3,500	4,990	8 x M24	FS-MO-240-18000
19,000	2,400	5,020	225	3,750	5,225	8 x M24	FS-MO-240-19000
20,000	2,400	5,270	225	4,000	5,460	8 x M24	FS-MO-240-20000
21,000	2,400	5,520	225	4,250	5,700	8 x M24	FS-MO-240-21000
22,500	2,400	5,770	225	4,500	5,940	8 x M24	FS-MO-240-22500
23,500	2,400	6,020	225	4,750	6,180	8 x M24	FS-MO-240-23500
24,500	2,400	6,270	225	5,000	6,420	8 x M24	FS-MO-240-24500
25,500	2,400	6,520	225	5,250	6,665	8 x M24	FS-MO-240-25500
27,000	2,400	6,770	225	5,500	6,905	8 x M24	FS-MO-240-27000
28,000	2,400	7,020	225	5,750	7,150	8 x M24	FS-MO-240-28000
29,000	2,400	7,270	225	6,000	7,395	8 x M24	FS-MO-240-29000
30,000	2,400	7,520	225	6,250	7,640	8 x M24	FS-MO-240-30000

FERMENTATION AND STORAGE TANK FS-MO: TANK Ø 2,600 MM

Capacity	ø	h1	h2	h6	D1	HV	Order No.
litres	mm	mm	mm	mm	mm	mm	
10,800	2,600	2,860	225	1,500	3,480	8 x M24	FS-MO-260-10800
12,200	2,600	3,110	225	1,750	3,670	8 x M24	FS-MO-260-12200
13,500	2,600	3,360	225	2,000	3,865	8 x M24	FS-MO-260-13500
14,500	2,600	3,610	225	2,250	4,070	8 x M24	FS-MO-260-14500
16,000	2,600	3,860	225	2,500	4,280	8 x M24	FS-MO-260-16000
17,300	2,600	4,110	225	2,750	4,490	8 x M24	FS-MO-260-17300
18,500	2,600	4,360	225	3,000	4,710	8 x M24	FS-MO-260-18500
20,000	2,600	4,610	225	3,250	4,930	8 x M24	FS-MO-260-20000
21,300	2,600	4,860	225	3,500	5,150	8 x M24	FS-MO-260-21300
22,500	2,600	5,110	225	3,750	5,375	8 x M24	FS-MO-260-22500
24,000	2,600	5,360	225	4,000	5,610	8 x M24	FS-MO-260-24000
25,300	2,600	5,610	225	4,250	5,845	8 x M24	FS-MO-260-25300
26,500	2,600	5,860	225	4,500	6,080	8 x M24	FS-MO-260-26500
28,000	2,600	6,110	225	4,750	6,320	8 x M24	FS-MO-260-28000
29,000	2,600	6,360	225	5,000	6,560	8 x M24	FS-MO-260-29000
30,500	2,600	6,610	225	5,250	6,800	8 x M24	FS-MO-260-30500
32,000	2,600	6,860	225	5,500	7,040	10 x M30	FS-MO-260-32000
33,000	2,600	7,110	225	5,750	7,290	10 x M30	FS-MO-260-33000
34,500	2,600	7,360	225	6,000	7,530	10 x M30	FS-MO-260-34500
35,800	2,600	7,610	225	6,250	7,775	10 x M30	FS-MO-260-35800
37,000	2,600	7,860	225	6,500	8,020	10 x M30	FS-MO-260-37000
38,500	2,600	8,110	225	6,750	8,265	10 x M30	FS-MO-260-38500
39,800	2,600	8,360	225	7,000	8,510	10 x M30	FS-MO-260-39800

FERMENTATION AND STORAGE TANK: TANK Ø 2,800 MM

Capacity litres	ø mm	h1 mm	h2 mm	h6 mm	D1 mm	HV mm	Order No.
12,500	2,800	2,890	225	1,500	3,630	8 x M24	FS-MO-280 -12500
14,000	2,800	3,140	225	1,750	3,815	8 x M24	FS-MO-280 -14000
15,500	2,800	3,390	225	2,000	4,005	8 x M24	FS-MO-280 -15500
17,000	2,800	3,640	225	2,250	4,205	8 x M24	FS-MO-280 -17000
18,500	2,800	3,890	225	2,500	4,405	8 x M24	FS-MO-280 -18500
20,000	2,800	4,140	225	2,750	4,615	8 x M24	FS-MO-280 -20000
21,500	2,800	4,390	225	3,000	4,830	8 x M24	FS-MO-280 -21500
23,000	2,800	4,640	225	3,250	5,045	8 x M24	FS-MO-280 -23000
24,500	2,800	4,890	225	3,500	5,265	8 x M24	FS-MO-280 -24500
26,000	2,800	5,140	225	3,750	5,485	8 x M24	FS-MO-280 -26000
27,500	2,800	5,390	225	4,000	5,710	8 x M24	FS-MO-280 -27500
29,400	2,800	5,640	225	4,250	5,940	8 x M24	FS-MO-280 -29400
31,000	2,800	5,890	225	4,500	6,170	8 x M24	FS-MO-280 -31000
32,500	2,800	6,140	225	4,750	6,400	8 x M24	FS-MO-280 -32500
34,000	2,800	6,390	225	5,000	6,635	8 x M30	FS-MO-280 -34000
35,500	2,800	6,640	225	5,250	6,870	8 x M30	FS-MO-280 -35500
37,000	2,800	6,890	225	5,500	7,110	8 x M30	FS-MO-280 -37000
38,500	2,800	7,140	225	5,750	7,350	8 x M30	FS-MO-280 -38500
40,000	2,800	7,390	225	6,000	7,620	10 x M30	FS-MO-280 -40000
41,500	2,800	7,640	225	6,250	7,860	10 x M30	FS-MO-280 -41500
43,000	2,800	7,890	225	6,500	8,100	10 x M30	FS-MO-280 -43000
44,500	2,800	8,140	225	6,750	8,345	10 x M30	FS-MO-280 -44500

FERMENTATION AND STORAGE TANK FS-MO: TANK Ø 3,000 MM

Capacity	ø	h1	h2	h6	D1	HV	Order No.
litres	mm	mm	mm	mm	mm	mm	
12,500	3,000	2,630	225	1,000	3,510	8 x M30	FS-MO-300- 12500
14,000	3,000	2,880	225	1,250	3,675	8 x M30	FS-MO-300- 14000
16,000	3,000	3,130	225	1,500	3,855	8 x M30	FS-MO-300- 16000
17,500	3,000	3,380	225	1,750	4,040	8 x M30	FS-MO-300- 17500
19,500	3,000	3,630	225	2,000	4,230	8 x M30	FS-MO-300- 19500
21,000	3,000	3,880	225	2,250	4,430	8 x M30	FS-MO-300- 21000
23,000	3,000	4,130	225	2,500	4,630	8 x M30	FS-MO-300- 23000
24,500	3,000	4,380	225	2,750	4,840	8 x M30	FS-MO-300- 24500
26,500	3,000	4,630	225	3,000	5,050	8 x M30	FS-MO-300- 26500
28,000	3,000	4,880	225	3,250	5,270	8 x M30	FS-MO-300- 28000
30,000	3,000	5,130	225	3,500	5,490	8 x M30	FS-MO-300- 30000
31,500	3,000	5,380	225	3,750	5,710	8 x M30	FS-MO-300- 31500
33,500	3,000	5,630	225	4,000	5,935	8 x M30	FS-MO-300- 33500
35,000	3,000	5,880	225	4,250	6,160	8 x M30	FS-MO-300- 35000
37,000	3,000	6,130	225	4,500	6,390	8 x M30	FS-MO-300- 37000
39,000	3,000	6,380	225	4,750	6,625	8 x M30	FS-MO-300- 39000
40,500	3,000	6,630	225	5,000	6,860	10 x M30	FS-MO-300- 40500
42,500	3,000	6,880	225	5,250	7,095	10 x M30	FS-MO-300- 42500
44,000	3,000	7,130	225	5,500	7,335	10 x M30	FS-MO-300- 44000
46,000	3,000	7,380	225	5,750	7,575	10 x M30	FS-MO-300- 46000
47,500	3,000	7,630	225	6,000	7,815	10 x M30	FS-MO-300- 47500
49,500	3,000	7,880	225	6,250	8,060	10 x M30	FS-MO-300- 49500
51,000	3,000	8,130	225	6,500	8,310	10 x M30	FS-MO-300- 51000
53,000	3,000	8,380	225	6,750	8,560	10 x M30	FS-MO-300- 53000
54,500	3,000	8,630	225	7,000	8,810	10 x M30	FS-MO-300- 54500
56,500	3,000	8,880	225	7,250	9,060	10 x M30	FS-MO-300- 56500
58,000	3,000	9,130	225	7,500	9,310	10 x M30	FS-MO-300- 58000

FERMENTATION AND STORAGE TANK FS-MO: TANK Ø 3,200 MM

Capacity	ø	h1	h2	h6	D1	HV	Order No.
litres	mm	mm	mm	mm	mm	mm	
18,800	3,200	3,230	225	1,500	4,050	8 x M30	FS-MO-320- 18800
20,500	3,200	3,480	225	1,750	4,235	8 x M30	FS-MO-320- 20500
22,500	3,200	3,730	225	2,000	4,425	8 x M30	FS-MO-320- 22500
24,500	3,200	3,980	225	2,250	4,620	8 x M30	FS-MO-320- 24500
26,500	3,200	4,230	225	2,500	4,820	8 x M30	FS-MO-320- 26500
28,500	3,200	4,480	225	2,750	5,025	8 x M30	FS-MO-320- 28500
30,500	3,200	4,730	225	3,000	5,235	8 x M30	FS-MO-320- 30500
32,500	3,200	4,980	225	3,250	5,445	8 x M30	FS-MO-320- 32500
34,500	3,200	5,230	225	3,500	5,725	8 x M30	FS-MO-320- 34500
36,500	3,200	5,480	225	3,750	5,940	8 x M30	FS-MO-320- 36500
38,500	3,200	5,730	225	4,000	6,160	8 x M30	FS-MO-320- 38500
40,500	3,200	5,980	225	4,250	6,385	10 x M30	FS-MO-320- 40500
42,500	3,200	6,230	225	4,500	6,605	10 x M30	FS-MO-320- 42500
44,500	3,200	6,480	225	4,750	6,835	10 x M30	FS-MO-320- 44500
46,500	3,200	6,730	225	5,000	7,060	10 x M30	FS-MO-320- 46500
48,500	3,200	6,980	225	5,250	7,295	10 x M30	FS-MO-320- 48500
50,500	3,200	7,230	225	5,500	7,555	10 x M30	FS-MO-320- 50500
52,500	3,200	7,480	225	5,750	7,790	10 x M30	FS-MO-320- 52500
54,500	3,200	7,730	225	6,000	8,025	10 x M30	FS-MO-320- 54500
56,500	3,200	7,980	225	6,250	8,265	10 x M30	FS-MO-320- 56500
58,500	3,200	8,230	225	6,500	8,500	10 x M36	FS-MO-320- 58500
60,500	3,200	8,480	225	6,750	8,740	10 x M36	FS-MO-320- 60500
62,500	3,200	8,730	225	7,000	8,985	12 x M36	FS-MO-320- 62500
64,000	3,200	8,980	225	7,250	9,225	12 x M36	FS-MO-320- 64000
66,500	3,200	9,230	225	7,500	9,465	12 x M36	FS-MO-320- 66500
68,500	3,200	9,480	225	7,750	9,710	12 x M36	FS-MO-320- 68500

FERMENTATION AND STORAGE TANK FS-MO: TANK Ø 3,400 MM

Capacity	ø	h1	h2	h6	D1	HV	Order No.
litres	mm	mm	mm	mm	mm	mm	
21,500	3,400	3,260	225	1,500	4,285	10 x M30	FS-MO-340- 21500
24,000	3,400	3,510	225	1,750	4,455	10 x M30	FS-MO-340- 24000
26,000	3,400	3,760	225	2,000	4,635	10 x M30	FS-MO-340- 26000
28,000	3,400	4,010	225	2,250	4,820	10 x M30	FS-MO-340- 28000
30,500	3,400	4,260	225	2,500	5,010	10 x M30	FS-MO-340- 30500
33,000	3,400	4,510	225	2,750	5,210	10 x M30	FS-MO-340- 33000
35,000	3,400	4,760	225	3,000	5,410	10 x M30	FS-MO-340- 35000
37,500	3,400	5,010	225	3,250	5,615	10 x M30	FS-MO-340- 37500
39,500	3,400	5,260	225	3,500	5,825	10 x M30	FS-MO-340- 39500
42,000	3,400	5,510	225	3,750	6,040	10 x M30	FS-MO-340- 42000
44,000	3,400	5,760	225	4,000	6,255	10 x M30	FS-MO-340- 44000
46,500	3,400	6,010	225	4,250	6,475	10 x M30	FS-MO-340- 46500
48,500	3,400	6,260	225	4,500	6,695	10 x M30	FS-MO-340- 48500
51,000	3,400	6,510	225	4,750	6,950	10 x M30	FS-MO-340- 51000
53,000	3,400	6,760	225	5,000	7,170	10 x M30	FS-MO-340- 53000
55,500	3,400	7,010	225	5,250	7,395	10 x M30	FS-MO-340- 55500
57,500	3,400	7,260	225	5,500	7,625	10 x M30	FS-MO-340- 57500
60,000	3,400	7,510	225	5,750	7,850	10 x M30	FS-MO-340- 60000
62,000	3,400	7,760	225	6,000	8,095	12 x M30	FS-MO-340- 62000
64,500	3,400	8,010	225	6,250	8,330	12 x M36	FS-MO-340- 64500
66,500	3,400	8,260	225	6,500	8,565	12 x M36	FS-MO-340- 66500
69,000	3,400	8,510	225	6,750	8,800	12 x M36	FS-MO-340- 69000
71,000	3,400	8,760	225	7,000	9,050	12 x M36	FS-MO-340- 71000
73,000	3,400	9,010	225	7,250	9,295	12 x M36	FS-MO-340- 73000
75,500	3,400	9,260	225	7,500	9,530	12 x M36	FS-MO-340- 75500
78,000	3,400	9,510	225	7,750	9,775	12 x M36	FS-MO-340- 78000
80,000	3,400	9,760	225	8,000	10,015	12 x M36	FS-MO-340- 80000
82,000	3,400	10,010	225	8,250	10,260	12 x M36	FS-MO-340- 82000
84,500	3,400	10,260	225	8,500	10,500	12 x M36	FS-MO-340- 84500
87,000	3,400	10,510	225	8,750	10,745	12 x M36	FS-MO-340- 87000
89,000	3,400	10,760	225	9,000	10,990	14 x M36	FS-MO-340- 89000

FERMENTATION AND STORAGE TANK FS-MO: TANK Ø 3,600 MM

Capacity litres	ø mm	h1 mm	h2 mm	h6 mm	D1 mm	HV mm	Order No.
24,500	3,600	3,340	225	1,500	4,415	10 x M30	FS-MO-360- 24500
27,000	3,600	3,590	225	1,750	4,580	10 x M30	FS-MO-360- 27000
29,500	3,600	3,840	225	2,000	4,755	10 x M30	FS-MO-360- 29500
32,000	3,600	4,090	225	2,250	4,940	10 x M30	FS-MO-360- 32000
35,000	3,600	4,340	225	2,500	5,125	10 x M30	FS-MO-360- 35000
37,500	3,600	4,590	225	2,750	5,320	10 x M30	FS-MO-360- 37500
40,000	3,600	4,840	225	3,000	5,520	10 x M30	FS-MO-360- 40000
42,500	3,600	5,090	225	3,250	5,720	10 x M30	FS-MO-360- 42500
45,000	3,600	5,340	225	3,500	5,925	10 x M30	FS-MO-360- 45000
47,500	3,600	5,590	225	3,750	6,140	10 x M30	FS-MO-360- 47500
50,000	3,600	5,840	225	4,000	6,430	10 x M30	FS-MO-360- 50000
52,500	3,600	6,090	225	4,250	6,645	10 x M30	FS-MO-360- 52500
55,000	3,600	6,340	225	4,500	6,860	12 x M30	FS-MO-360- 55000
57,500	3,600	6,590	225	4,750	7,080	12 x M30	FS-MO-360- 57500
60,000	3,600	6,840	225	5,000	7,305	12 x M30	FS-MO-360- 60000
62,500	3,600	7,090	225	5,250	7,530	12 x M30	FS-MO-360- 62500
65,000	3,600	7,340	225	5,500	7,755	12 x M36	FS-MO-360- 65000
67,500	3,600	7,590	225	5,750	7,985	12 x M36	FS-MO-360- 67500
70,000	3,600	7,840	225	6,000	8,230	12 x M36	FS-MO-360- 70000
72,500	3,600	8,090	225	6,250	8,460	12 x M36	FS-MO-360- 72500
75,000	3,600	8,340	225	6,500	8,695	12 x M36	FS-MO-360- 75000
78,000	3,600	8,590	225	6,750	8,930	12 x M36	FS-MO-360- 78000
80,000	3,600	8,840	225	7,000	9,170	12 x M36	FS-MO-360- 80000
83,000	3,600	9,090	225	7,250	9,405	12 x M36	FS-MO-360- 83000
85,500	3,600	9,340	225	7,500	9,645	12 x M36	FS-MO-360- 85500
88,000	3,600	9,590	225	7,750	9,885	12 x M36	FS-MO-360- 88000
90,000	3,600	9,840	225	8,000	10,130	14 x M36	FS-MO-360- 90000
93,000	3,600	10,090	225	8,250	10,370	14 x M36	FS-MO-360- 93000
95,500	3,600	10,340	225	8,500	10,615	14 x M36	FS-MO-360- 95500
98,000	3,600	10,590	225	8,750	10,855	14 x M36	FS-MO-360- 98000
100,500	3,600	10,840	225	9,000	11,100	14 x M36	FS-MO-360- 100500
103,000	3,600	11,110	225	9,250	11,370	16 x M36	FS-MO-360- 103000
105,500	3,600	11,360	225	9,500	11,620	16 x M36	FS-MO-360- 105500
108,000	3,600	11,610	225	9,750	11,870	16 x M36	FS-MO-360- 108000
110,500	3,600	11,860	225	10,000	12,120	16 x M36	FS-MO-360- 110500
113,000	3,600	12,110	225	10,250	12,370	16 x M36	FS-MO-360- 113000
115,500	3,600	12,360	225	10,500	12,620	16 x M36	FS-MO-360- 115500
118,000	3,600	12,610	225	10,750	12,870	16 x M36	FS-MO-360- 118000
120,500	3,600	12,860	225	11,000	13,120	16 x M36	FS-MO-360- 120500
123,000	3,600	13,110	225	11,250	13,370	16 x M36	FS-MO-360- 123000
126,000	3,600	13,360	225	11,500	13,620	16 x M36	FS-MO-360- 126000

Stacking tanks – sizes and prices on request

Intermediate sizes available

In case of 2,200 mm ø a 10 mm shell height equates to = 38.00 litres tank volume
In case of 2,400mm ø a 10 mm shell height equates to = 45.10 litres tank volume
In case of 2,600 mm ø a 10 mm shell height equates to = 53.00 litres tank volume
In case of 2.800 mm ø a 10 mm shell height equates to = 61.50 litres tank volume
In case of 3.000 mm ø a 10 mm shell height equates to = 70.70 litres tank volume
In case of 3.200 mm ø a 10 mm shell height equates to = 80.70 litres tank volume
In case of 3.400 mm ø a 10 mm shell height equates to = 90.50 litres tank volume
In case of 3.600 mm ø a 10 mm shell height equates to = 101.50 litres tank volume

Pricing for intermediate sizes

for intermediate sizes the price of the next larger size will apply (plus customization costs)

Option: Tank contact parts made of AISI 316 stainless steel

Surface IIld (2R), marbled outside on special request

Brushed outer finish

on special request

» Fermentation and storage tanks Rectangular base tank RS-MO Rectangular stacking tank RA-MO

If the room you have is restricted, Speidel's cubical tanks are just the right thing for you! They fit perfectly, have perfect weld seams and their curves are easy to clean. Our serial production is more hygienic and cheaper than a customised version.

Therefore, we rather recommend our space-saving models. They guarantee you best Speidel quality, perfect fit, optimal hygiene and easy cleaning.

Perfect utilisation of space for small, narrow cellars.

APPLICATION RANGE (PRESSURELESS)

- Storage
- Maturation
- Fermentation
- Mixing/Blending
- Processes

Ideal for

- Beer
- Soft drinks
- Alcoholic drinks

STANDARD EQUIPMENT RECTANGULAR BASE TANK RS-MO/STACKING TANK RA-MO

- Tank shell and tank bottom made of AISI 304 stainless steel, surface IIId (2R), marbled outside
- Tank top made of AISI 316 stainless steel, surface IIId (2R), marbled outside
- With lifting lugs
- Base tank from 2,000 mm tank height upwards and stacking tank with ladder safety bow
- Vaulted, stable tank top with moulded-on forward up-slope for complete filling and ventilation assuring a very small air contact area
- Moulded connection neck with filling and vent neck, external thread NW 50 Rd 78 x 1/6"
- Free-standing base tank on four welded-on legs
- Stacking tank with four welded-on stacking legs

SAMPLING

- Weld-on thread NW 10 DIN 11851 with sealing cap (for the installation of sample tap)

MANHOLE

- Stable manhole neck seamlessly moulded from the tank shell, 420 x 320 mm, door with butterfly bow and hand wheel

RACKING OUTLET

- With welded-on reinforcing plate with drilled hole 48 mm ø (to hold flap valve Gr. 37 or weld-on thread NW 40, NW 50 DIN 11851)

FILL LEVEL

- Weld-on thread NW 10 DIN 11851 with sealing cap including fastening points at tank shell (for the installation of fill level indicator)

BOTTOM OUTLET

- Vaulted, stable tank bottom with integrally moulded forward down-slope for complete draining with moulded connection neck, inhibiting suction effect with bottom outlet neck NW 50 DIN 11851

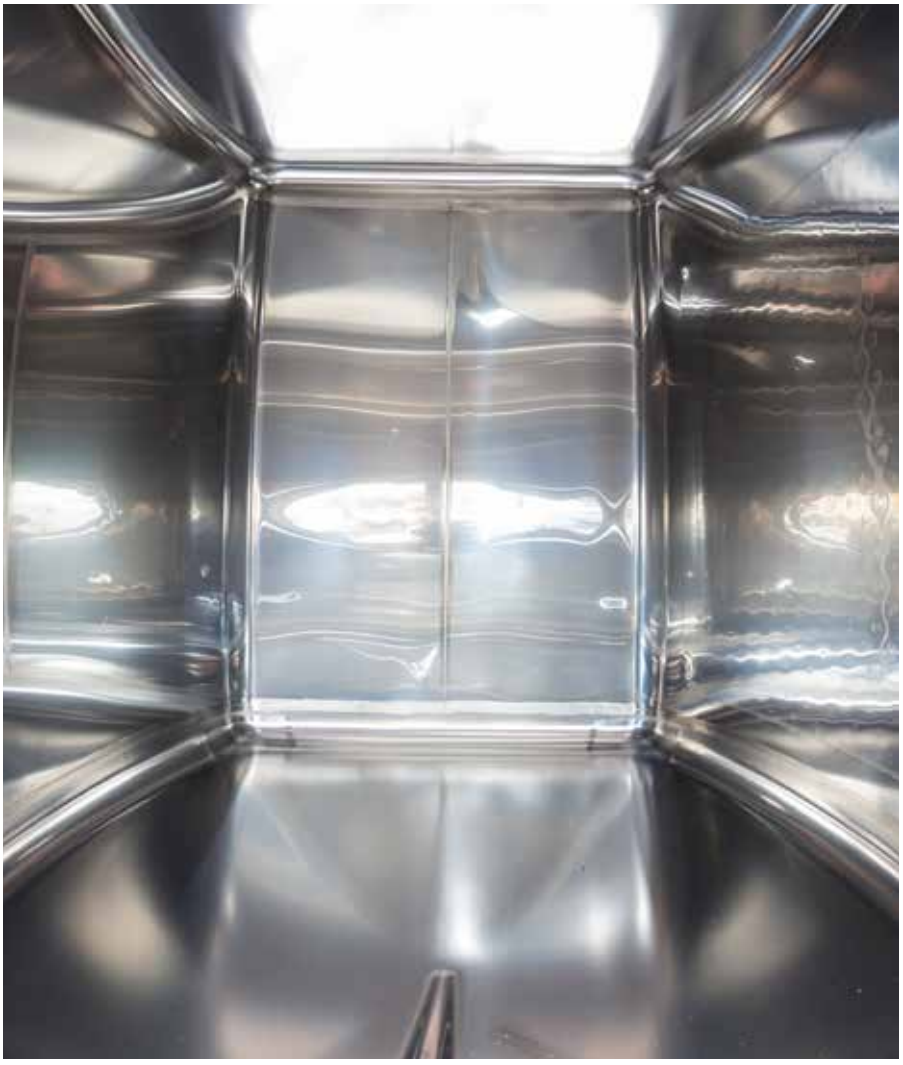

SET-UP EXAMPLE FOR RECTANGULAR BASE TANK RS-MO / STACKING TANK RA-MO

Item	Order No.
	
Rectangular base tank RS-MO-110-2300 litres	
› h1 = approx. 1,797 mm	
› Standard equipment as on page 53	RS-MO-110-2300
	
Rectangluar stacking tank RA-MO-110-2300 litres	
› h5 = 1,548 mm, H = 1.797 (h1) + 70 (h4) + 1,548 (h5) = 3,415 mm,	
Hges = 3,415 (H) + 80 (connection) + approx. 100 (height compensation) = approx. 3,595 mm	
› Standard equipment as on page 53	RA-MO-110-2300
	
Sampling (page 137)	
› With sampling tap NW 10 DIN 11851	64949
	
Racking outlet (page 133)	
› Welded gland with thread NW 50 DIN 11851	KA-120D
› With disc valve NW 50 DIN 11851	64945
	
Fill level (page 138)	
› Fill level indicator NW 10 mounted	FS-130H
	
Bottom outlet (page 133)	
› With yeast plug	HS-100A
› With disc valve NW 50 DIN 11851	64945
	
Temperature measurement (page 140)	
› Bi-metal dial thermometer ø 100 mm, measuring range - 20 °C to + 60 °C	
› Screwed sleeve for thermometer length = 125 mm	TM-140C
	
Heating and cooling jacket for base tank (page 104)	
› Double jacket C5 1,3 m² with welded gland G 1"	
for connection to available warm water / cold water source	
› Version 1, layout 50, connection position C5	1C5
	
Heating and cooling jacket for stacking tank (page 104)	
› Double jacket C5 1,3 m² with welded gland G 1"	
for connection to available warm water / cold water source	
› Version 1, layout 50, connection position C5	1C5
	
Adjustable feet (page 142)	
› With adjustable feet for tank legs (H = + approx. 100 mm)	46126

DIMENSIONS OF RECTANGULAR BASE TANK RS-MO / STACKING TANK RA-MO

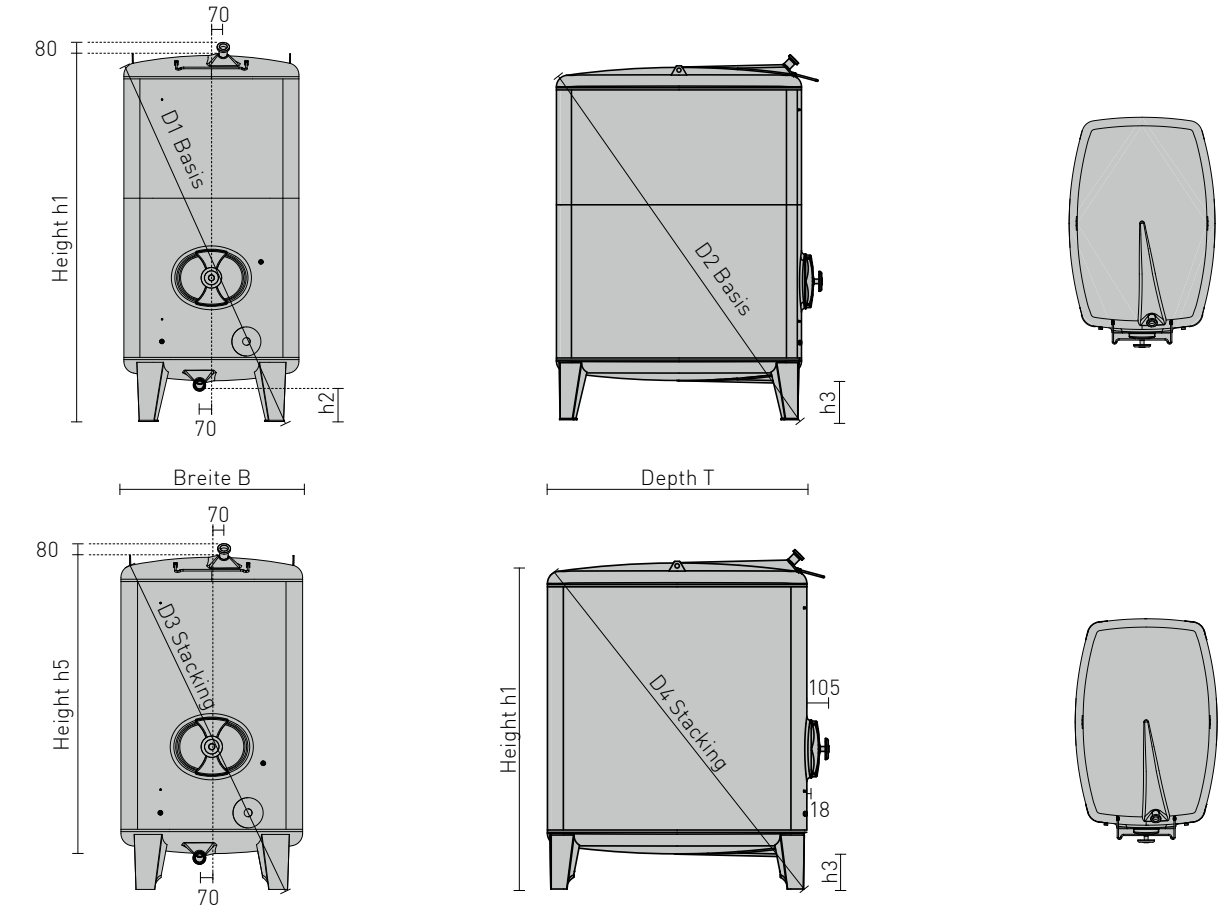

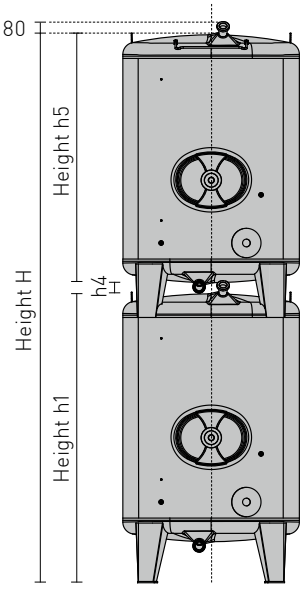

Please consider the maximum total volume per tank stack!

Legend:
h1 = Tank height
h2 = Discharge height
h3 = Clearance height
h4 = in between height
h5 = Tank height stacking tank without legs
D1 = Lateral installation height RS-MO
D2 = Frontal installation height RS-MO
D3 = Lateral installation height RA-MO
D4 = Frontal installation height RA-MO
H = Tank stack height
Hges = Total height

Intermediate sizes available

In case of 900 x 1,400 mm tank a 10 mm shell height equates to = 11.5 litres tank volume
In case of 1,100 x 1,600 mm tank a 10 mm shell height equates to = 16.1 litres tank volume
In case of 1,300 x 1,800 mm tank a 10 mm shell height equates to = 21.0 litres tank volume
In case of 1,500 x 2,000 mm tank a 10 mm shell height equates to = 26.5 litres tank volume

Pricing for intermediate sizes

for intermediate sizes the price of the next larger size will apply (plus customization costs)

Option: Tank contact parts made of AISI 316 stainless steel

Surface IIId (2R), marbled outside
on special request

Brushed outer finish

on special request

Larger tanks on request

RECTANGULAR BASE TANK RS-MO / STACKING TANK RA-MO: TANK CROSS SECTION 900 X 1,400 MM

Capacity	B	T	h1	h2	h3	D1	D2	h4	h5	D3	D4	H	Order No.	Order No.
litres	mm	mm	mm	mm	mm	mm	mm	mm	mm	mm	mm	mm	RS-MO	RA-MO
950	900	1,400	1,164	230	255	1,405	1,790	75	903	1,375	1,765	*	RS-MO-090-0950	RA-MO-090-0950
1,100	900	1,400	1,289	230	255	1,510	1,870	75	1,028	1,480	1,845	*	RS-MO-090-1100	RA-MO-090-1100
1,400	900	1,400	1,539	230	255	1,725	2,045	75	1,278	1,690	2,020	*	RS-MO-090-1400	RA-MO-090-1400
1,650	900	1,400	1,789	230	255	1,950	2,240	75	1,528	1,915	2,205	*	RS-MO-090-1650	RA-MO-090-1650
1,950	900	1,400	2,039	230	255	2,180	2,440	75	1,778	2,145	2,410	*	RS-MO-090-1950	RA-MO-090-1950
2,250	900	1,400	2,289	230	255	2,415	2,650	75	2,028	2,380	2,615	*	RS-MO-090-2250	RA-MO-090-2250
2,500	900	1,400	2,539	230	255	2,655	2,865	75	2,278	2,615	2,835	*	RS-MO-090-2500	RA-MO-090-2500
2,800	900	1,400	2,789	230	255	2,895	3,090	75	2,528	2,855	3,055	*	RS-MO-090-2800	RA-MO-090-2800
3,100	900	1,400	3,039	230	255	3,135	3,313	75	-	-	-	-	RS-MO-090-3100	-

Tank cross section 900 x 1,400 mm; maximum total volume per tank stack 4,000 litres

RECTANGULAR BASE TANK RS-MO / STACKING TANK RA-MO: TANK CROSS SECTION 1,100 X 1,600 MM

Capacity	B	T	h1	h2	h3	D1	D2	h4	h5	D3	D4	H	Order No.	Order No.
litres	mm	mm	mm	mm	mm	mm	mm	mm	mm	mm	mm	mm	RS-MO	RA-MO
1,500	1,100	1,600	1,297	230	245	1,610	2,015	70	1,048	1,580	1,990	*	RS-MO-110-1500	RA-MO-110-1500
1,900	1,100	1,600	1,547	230	245	1,810	2,175	70	1,298	1,780	2,150	*	RS-MO-110-1900	RA-MO-110-1900
2,300	1,100	1,600	1,797	230	245	2,025	2,355	70	1,548	1,990	2,330	*	RS-MO-110-2300	RA-MO-110-2300
2,700	1,100	1,600	2,047	230	245	2,245	2,545	70	1,798	2,210	2,515	*	RS-MO-110-2700	RA-MO-110-2700
3,100	1,100	1,600	2,297	230	245	2,475	2,750	70	-	-	-	-	RS-MO-110-3100	-
3,500	1,100	1,600	2,547	230	245	2,705	2,960	70	-	-	-	-	RS-MO-110-3500	-
3,900	1,100	1,600	2,797	230	245	2,940	3,175	70	-	-	-	-	RS-MO-110-3900	-
4,300	1,100	1,600	3,047	230	245	3,180	3,395	70	-	-	-	-	RS-MO-110-4300	-

Tank cross section 1,100 x 1,600 mm; maximum total volume per tank stack 5,000 litres

RECTANGULAR BASE TANK RS-MO / STACKING TANK RA-MO: TANK CROSS SECTION 1,300 X 1,800 MM

Capacity	B	T	h1	h2	h3	D1	D2	h4	h5	D3	D4	H	Order No.	Order No.
litres	mm	mm	mm	mm	mm	mm	mm	mm	mm	mm	mm	mm	RS-MO	RA-MO
2,000	1,300	1,800	1,310	195	235	1,720	2,165	90	1,074	1,715	2,160	*	RS-MO-130-2000	RA-MO-130-2000
2,500	1,300	1,800	1,560	195	235	1,905	2,315	90	1,324	1,905	2,315	*	RS-MO-130-2500	RA-MO-130-2500
3,000	1,300	1,800	1,810	195	235	2,110	2,480	90	1,574	2,110	2,480	*	RS-MO-130-3000	RA-MO-130-3000
3,500	1,300	1,800	2,060	195	235	2,325	2,665	90	1,824	2,325	2,665	*	RS-MO-130-3500	RA-MO-130-3500
4,000	1,300	1,800	2,310	195	235	2,540	2,855	90	2,074	2,540	2,855	*	RS-MO-130-4000	RA-MO-130-4000
4,500	1,300	1,800	2,560	195	235	2,765	3,060	90	-	-	-	-	RS-MO-130-4500	-
5,000	1,300	1,800	2,810	195	235	2,995	3,265	90	-	-	-	-	RS-MO-130-5000	-
5,600	1,300	1,800	3,060	195	235	3,230	3,480	90	-	-	-	-	RS-MO-130-5600	-

Tank cross section 1,300 x 1,800 mm; maximum total volume per tank stack 7,000 litres

* **The respective height H is calculated as follows: H = h1 + h4 + h5**

RECTANGULAR BASE TANK RS-MO / STACKING TANK RA-MO: TANK CROSS SECTION 1,500 X 2,000 MM

Capacity	B	T	h1	h2	h3	D1	D2	h4	h5	D3	D4	H	Order No.	Order No.
litres	mm	mm	mm	mm	mm	mm	mm	mm	mm	mm	mm	mm	RS-MO	RA-MO
2,600	1,500	2,000	1,368	215	250	1,875	2,350	110	1,100	1,890	2,360	*	RS-MO-150-2600	RA-MO-150-2600
3,200	1,500	2,000	1,618	215	250	2,055	2,490	110	1,350	2,070	2,505	*	RS-MO-150-3200	RA-MO-150-3200
3,900	1,500	2,000	1,868	215	250	2,250	2,655	110	1,600	2,270	2,670	*	RS-MO-150-3900	RA-MO-150-3900
4,500	1,500	2,000	2,118	215	250	2,455	2,830	110	1,850	2,475	2,845	*	RS-MO-150-4500	RA-MO-150-4500
5,200	1,500	2,000	2,368	215	250	2,670	3,015	110	2,100	2,690	3,030	*	RS-MO-150-5200	RA-MO-150-5200
5,800	1,500	2,000	2,618	215	250	2,890	3,210	110	2,350	2,905	3,225	*	RS-MO-150-5800	RA-MO-150-5800
6,500	1,500	2,000	2,868	215	250	3,110	3,410	110	-	-	-	-	RS-MO-150-6500	-
7,200	1,500	2,000	3,118	215	250	3,440	3,620	110	-	-	-	-	RS-MO-150-7200	-

Tank cross section 1,500 x 2,000 mm; maximum total volume per tank stack 10,200 litres

SLANTED RECTANGULAR TANKS FOR SLANTED CELLAR CEILINGS

Tank cross section	Dimension A	Dimension B	Nominal volume RS-MO / RA-MO minus	Order No.
mm	mm	mm		
900 x 1,400	650	490	130 litres	OB 040Q
1,100 x 1,600	750	600	160 litres	OB 040Q
1,300 x 1,800	850	713	210 litres	OB 040Q
1,500 x 2,000	950	847	260 litres	OB 040Q

(not possible with base tank for tank stacks)

Perfect use of space!

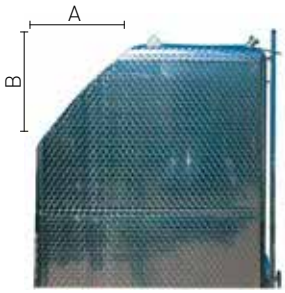

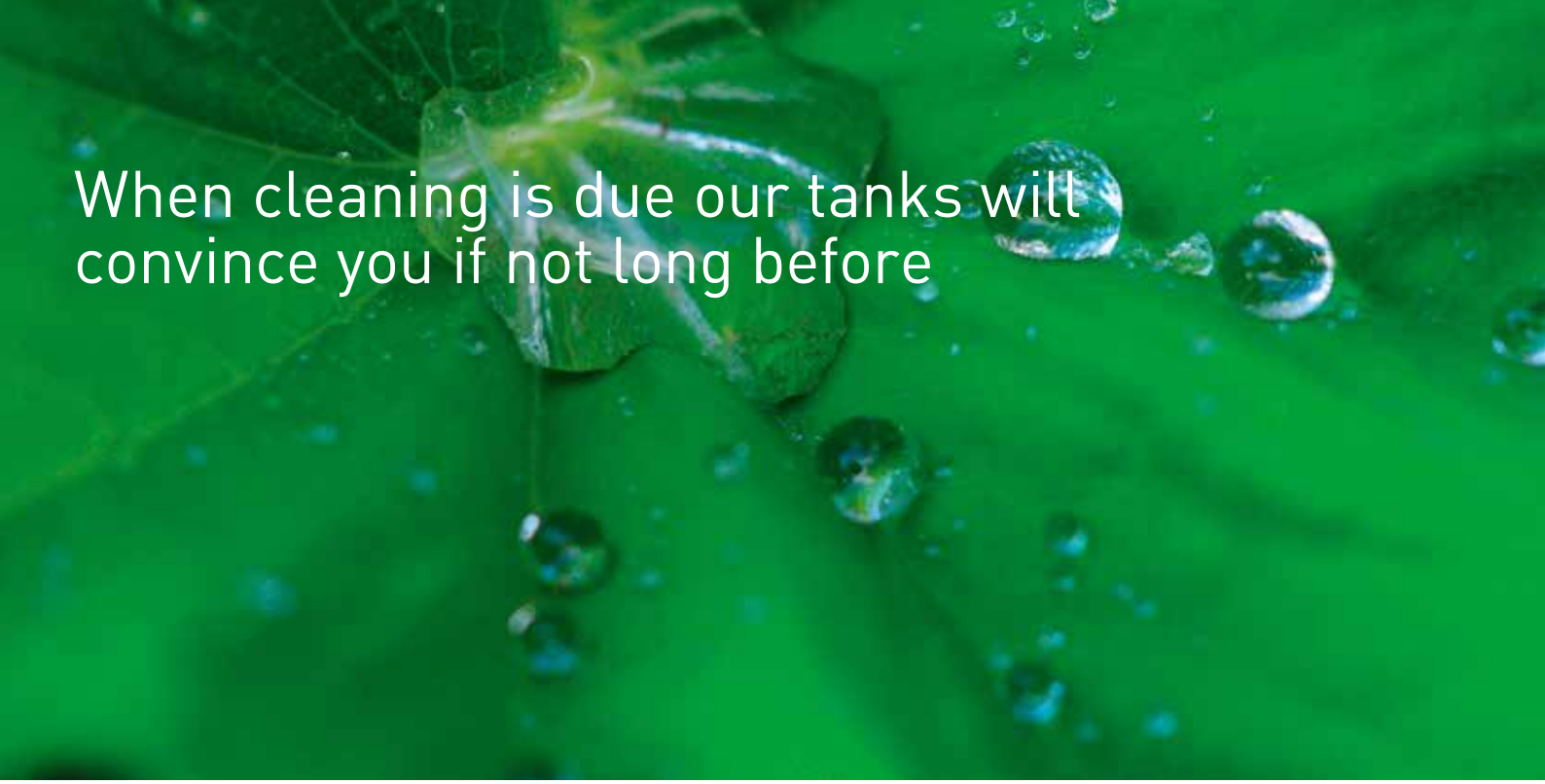

» Fermentation and storage tanks Square base tank RS-MO-Q Square stacking tank RA-MO-Q

In case you wish to square the circle, Speidel offers its high-quality fermentation and storage tanks also with a square base. This allows you to use the space available to the max. The perfect exploitation of space is truly unique and only Speidel manufactures square tanks of such high quality as standard tanks. This is nothing less than quality squared!

Our square tanks have the same properties as our rectangular tanks: maximum stability, dimensionally stable tank top and complete filling and draining. Easy cleaning is guaranteed due to smooth surfaces and perfect weld seams.

Cuboid for the perfect use of space

APPLICATION RANGE (PRESSURELESS)

- Storage
- Maturation
- Fermentation
- Mixing/Blending
- Processes

Ideal for
- Beer
- Soft drinks
- Alcoholic drinks

STANDARD EQUIPMENT SQUARE BASE TANK RS-MO-Q / STACKING TANK RA-MO-Q

- Tank shell and tank bottom made of AISI 304 stainless steel, surface IIId (2R), marbled outside
- Tank top made of AISI 316 stainless steel, surface IIId (2R), marbled outside
- With lifting lugs
- Base tank from 2,000 mm tank height upwards and stacking tank ladder safety bow
- Vaulted, stable tank top with moulded-on forward up-slope for complete filling and ventilation assuring a very small air contact area
- Moulded connection neck with filling and vent neck, external thread NW 50 Rd 78 x 1/6"
- Free-standing base tank on four welded-on legs
- Stacking tank with four welded-on stacking legs

SAMPLING

- Weld-on thread NW 10 DIN 11851 with sealing cap (for the installation of sample tap)

MANHOLE

- Stable manhole neck seamlessly moulded out of the tank shell, stable manhole neck, 420 x 320 mm, door with butterfly bow and hand wheel

RACKING OUTLET

- With welded-on reinforcing plate with drilled hole 48 mm ø (to hold flap valve Gr. 37 or weld-on thread NW 40, NW 50 DIN 11851)

FILL LEVEL

- Weld-on thread NW 10 DIN 11851 with sealing cap including fastening points at tank shell (for the installation of fill level indicator)

BOTTOM OUTLET

- Vaulted, stable tank bottom with integrally moulded forward down-slope for complete draining with moulded connection port, inhibiting suction effect with bottom outlet neck NW 50 DIN 11851

EXAMPLE CELLAR LAYOUT

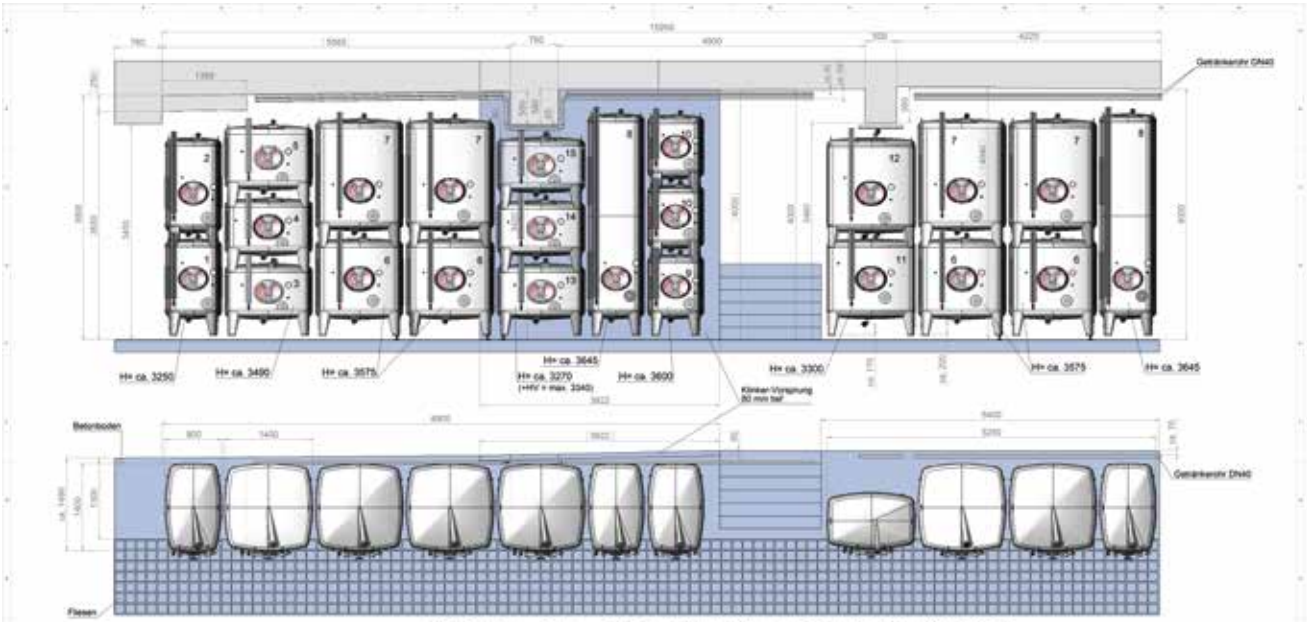

Pos	Anzahl	Type	Tankquerschnitt	Höhe h5	Höhe h1	Nenn-Inhalt	Gesamtinhalt
	[Stk.]		[mm]	[mm]		[Ltr.]	[Ltr.]
1	1	RS-MO-090-S 0136	900x1400	#	1539	1400	1400
2	1	RS-MO-090 0133	900x1400	1528	#	1650	1650
3	1	RS-MO-141-S 0002	1400x1400	#	ca. 1172	1500	3000
4	1	RA-MO-141-S 0004	1400x1400	ca. 919	#	1500	3000
15	1	RA-MO-141-S 0001	1400x1400	ca. 894	#	1450	1450
5	1	RA-MO-141-S 0003	1400x1400	ca. 1044	#	1700	1700
6	4	RS-MO-141-S 0003	1400x1400	#	ca. 1547	2150	8600
7	4	RA-MO-141-S 0002	1400x1400	ca. 1794	#	3000	12000
8	2	RS-MO-090-S 0138	900x1400	#	3539	3600	7200
9	1	RS-MO-090-S 0137	900x1400	#	1289	1100	1100
10	2	RA-MO-090-S 0050	900x1400	1028	#	1100	2200
11	1	RS-MO-090-S 0135	900x1400 quer	#	1539	1400	1400
12	1	RA-MO-090-S 0049	900x1400 quer	1528	#	1650	1650
13	1	RS-MO-141-S 0009	1400x1400	#	ca. 1147	1450	1450
14	1	RA-MO-141-S 0006	1400x1400	ca. 894	#	1450	1450
							46250

SET-UP EXAMPLE FOR SQUARE BASE TANK RS-MO-Q / STACKING TANK RA-MO-Q

Item	Order No.
 **Square base tank RS-MO-141-2600 litres** › h1 = 1,792 mm, Hges = 1,792 (h1) + 270 (dome) + 100 (height compensation) = approx. 2,162 mm › Standard equipment as on page 59	RS-MO-141-2600
 **Ventilation / Filling (page 130)** › Filler neck NW 400 on tank top; position: forward / vertical › Tank top with bead extrusion for total ventilation, H = + 270 mm	OB-040O
 **Sampling (page 142)** › With sampling tap NW 10 DIN 11851	64949
 **Racking outlet (page 142)** › Welded gland with thread NW 50 DIN 11851	KA-120D
› With disc valve NW 50 DIN 11851	64945
 **Fill level (page 142)** › Fill level indicator NW 10 mounted	FS-130H
 **Bottom outlet (page 133)** › With yeast plug	HS-100A
› With disc valve NW 50 DIN 11851	64945
 **Temperature measurement (page 140)** › Bi-metal dial thermometer ø 100 mm, measuring range - 20 °C to + 60 °C › Screwed sleeve for thermometer length = 125 mm	TM-140C
 **Heating and cooling jacket (page 104)** › Double jacket C6 1,5 m² with welded gland thread G 1" for connection to available warm water / cold water source › Version 1, layout 51, connection position C6	1C6
 **Adjustable feet (page 142)** › With adjustable feet for tank legs (H = + approx. 100 mm)	46126

DIMENSIONS OF SQUARE BASE TANK RS-MO-Q/STACKING TANK RA-MO-Q

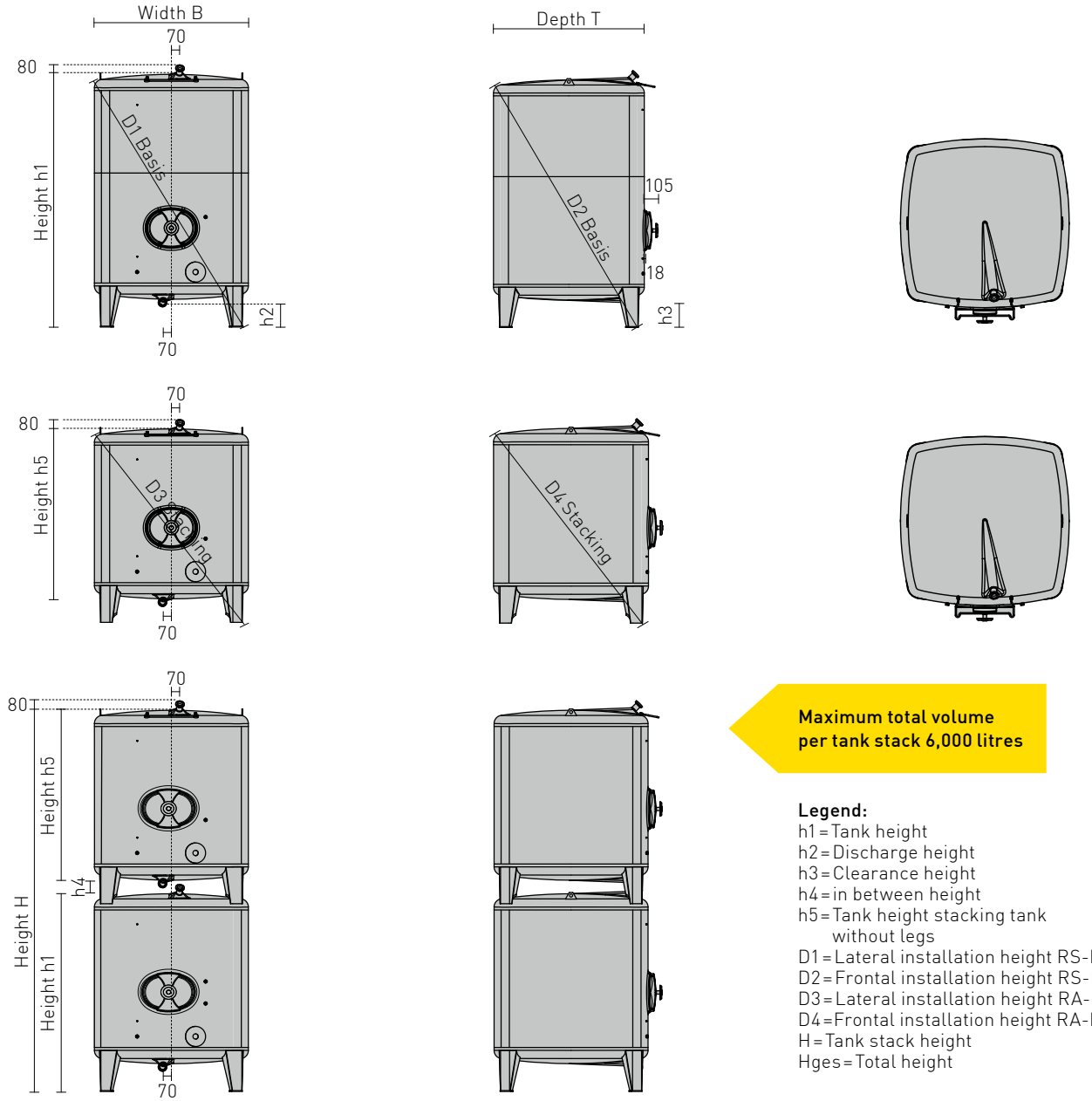

Maximum total volume per tank stack 6,000 litres

Legend:
h1 = Tank height
h2 = Discharge height
h3 = Clearance height
h4 = in between height
h5 = Tank height stacking tank without legs
D1 = Lateral installation height RS-MO-Q
D2 = Frontal installation height RS-MO-Q
D3 = Lateral installation height RA-MO-Q
D4 = Frontal installation height RA-MO-Q
H = Tank stack height
Hges = Total height

SQUARE BASE TANK RS-MO-Q/STACKING TANK RA-MO-Q

Capacity	B	T	h1	h2	h3	D1	D2	h4	h5	D3	D4	H	Order No.	Order No.
litres	mm	mm	mm	mm	mm	mm	mm	mm	mm	mm	mm	mm	RS-MO	RA-MO
1,500	1,400	1,400	1,172	225	250	1,755	1,755	75	919	1,730	1,730	*	RS-MO-141-1500	RA-MO-141-1500
1,700	1,400	1,400	1,297	225	250	1,840	1,840	75	1,044	1,810	1,810	*	RS-MO-141-1700	RA-MO-141-1700
2,150	1,400	1,400	1,547	225	250	2,015	2,015	75	1,294	1,985	1,985	*	RS-MO-141-2150	RA-MO-141-2150
2,600	1,400	1,400	1,792	225	250	2,210	2,210	75	1,544	2,180	2,180	*	RS-MO-141-2600	RA-MO-141-2600
3,000	1,400	1,400	2,047	225	250	2,415	2,415	75	1,794	2,380	2,380	*	RS-MO-141-3000	RA-MO-141-3000
3,400	1,400	1,400	2,297	225	250	2,625	2,625	75	-	-	-	-	RS-MO-141-3400	-
3,900	1,400	1,400	2,547	225	250	2,845	2,845	75	-	-	-	-	RS-MO-141-3900	-
4,350	1,400	1,400	2,797	225	250	3,070	3,070	75	-	-	-	-	RS-MO-141-4350	-
4,800	1,400	1,400	3,047	225	250	3,295	3,295	75	-	-	-	-	RS-MO-141-4800	-

Intermediate sizes available
In case of 1,400 x 1,400 mm tank a 10 mm shell height equates to = 18.2 litres tank volume

Larger tank sizes on request.
*** The respective height H is calculated as follows: H = h1 + h4 + h5**